REVISIONS				
ZONE	LTR	DESCRIPTION	DATE	APPROVED
	A	Pilot Production Release	8/13/92	JCB
	B	REVISED PER ECO 926579	9/4/92	B.BACHMAN

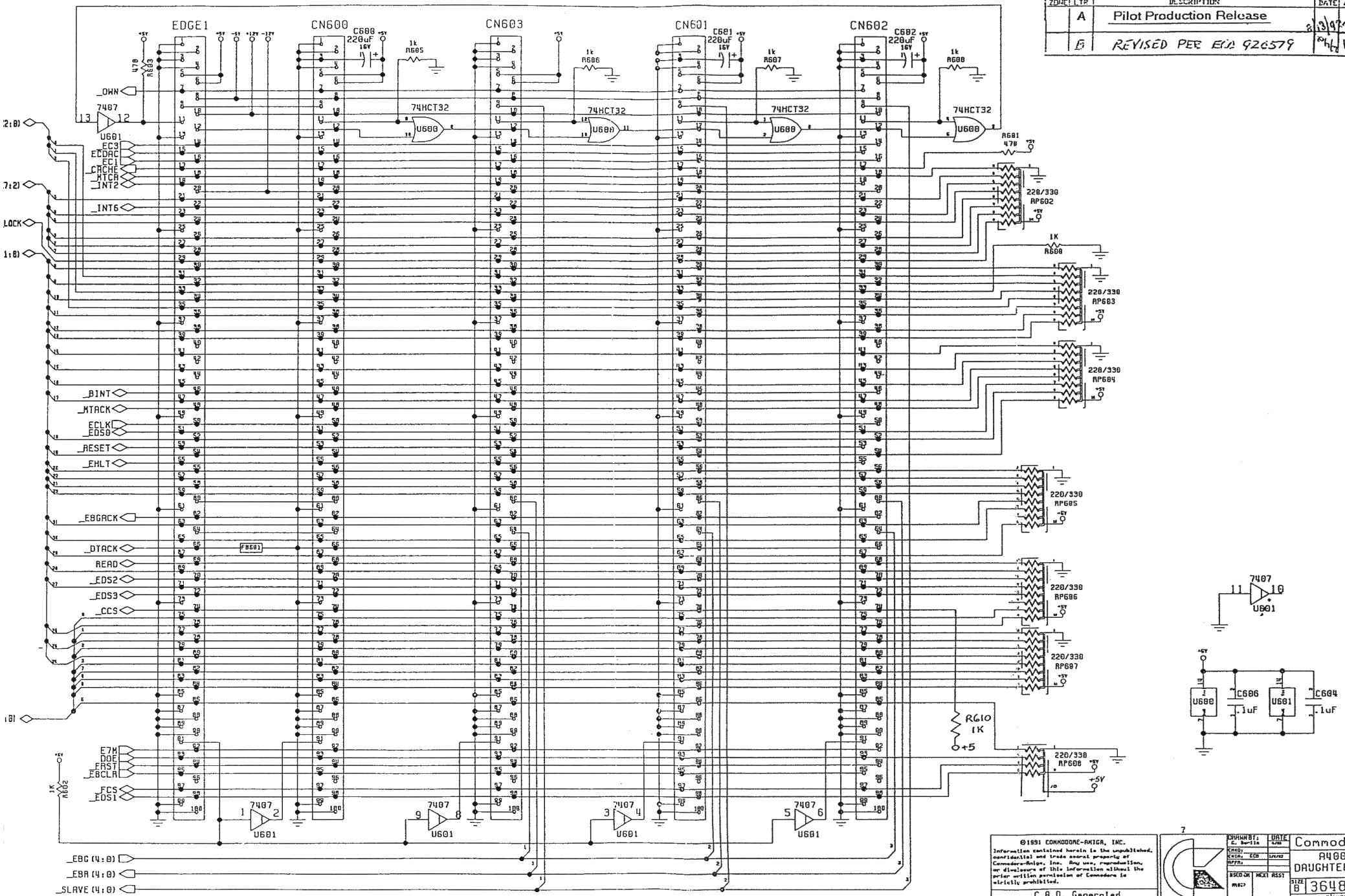

©1991 COMMODORE-AMIGA, INC.
Information contained herein is the unpublished, confidential and trade secret property of Commodore-Amiga, Inc. Any use, reproduction, or disclosure of this information without the prior written permission of Commodore is strictly prohibited.

C.A.D. Generated
No manual changes may be made to this document

DRAWN BY:	DATE
C. Berlin	6/92
CHKD:	
ENGR: ECO	10/92
APPR:	
BSED ON:	NEXT ASSY
MAST	

Commodore
A4000
DAUGHTER CARD

SIZE B 364821 REV B
SCALE NONE SHEET 1 OF 2

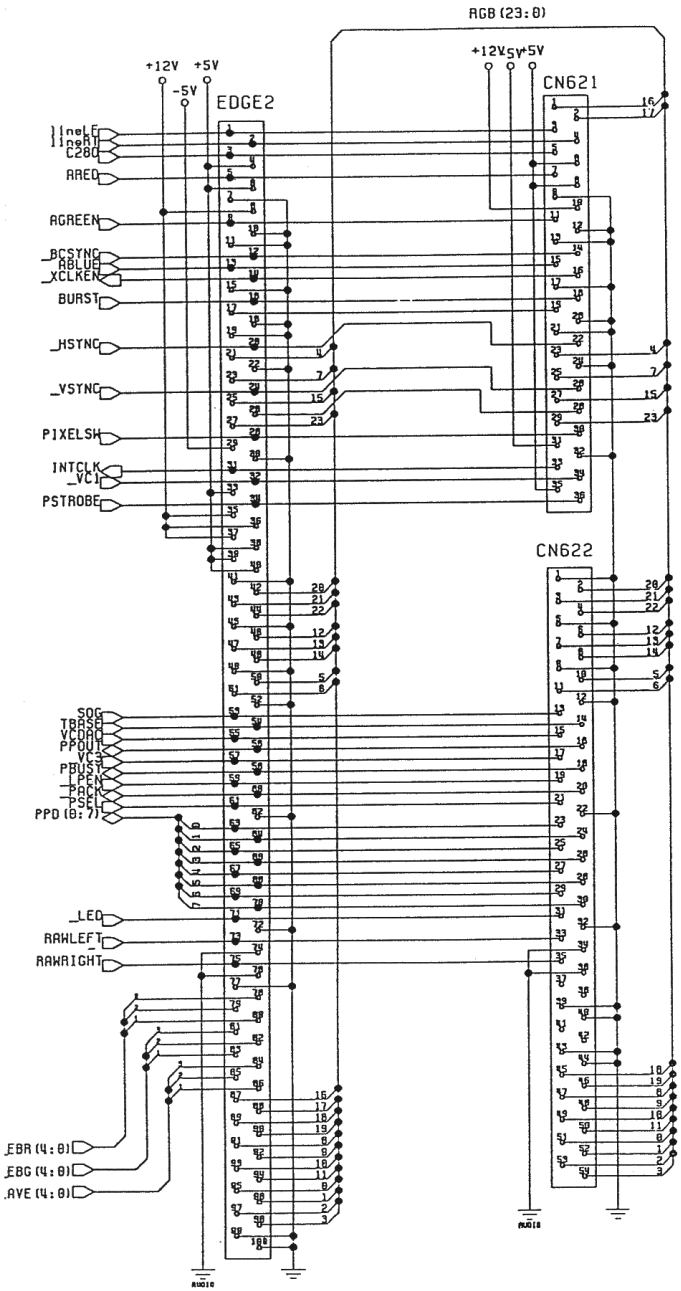

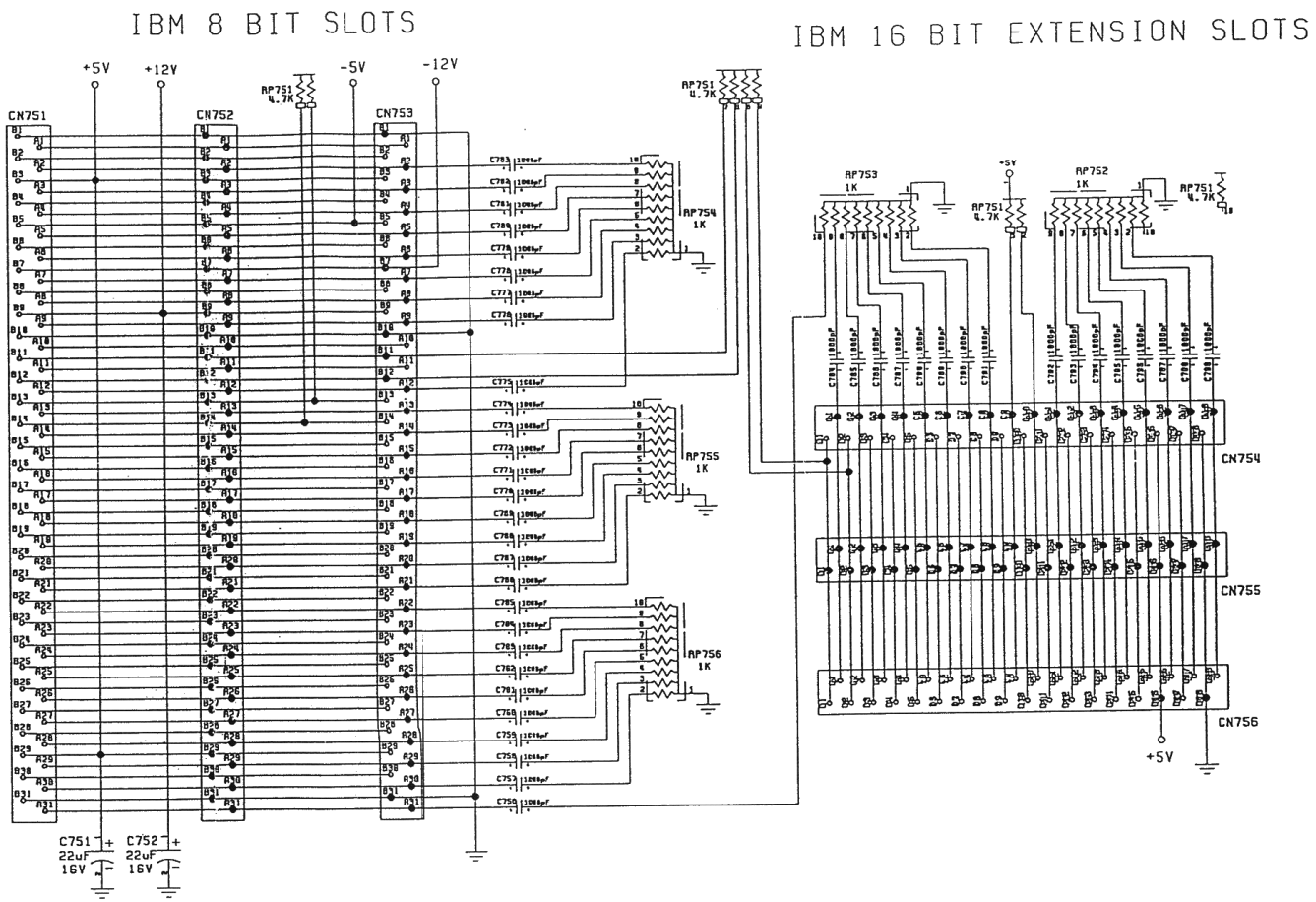

©1991 COMMODORE-AMIGA, INC.
Information contained herein is the unpublished, confidential and trade secret property of Commodore-Amiga, Inc. Any use, reproduction, or disclosure of this information without the prior written permission of Commodore is strictly prohibited.

C.A.D. Generated

No manual changes may be made to this document

DRAWN BY: B. Berlin
CHKD:
ENGR: ECR
APPR:
USED ON: A2000
NEXT ASST

Commodore
A4000
DAUGHTER CARD

SIZE B | 364821 | REV B

SCALE NONE SHEET 2 OF 2

PATH:/projects/ee1111/daughter_rev sheet2

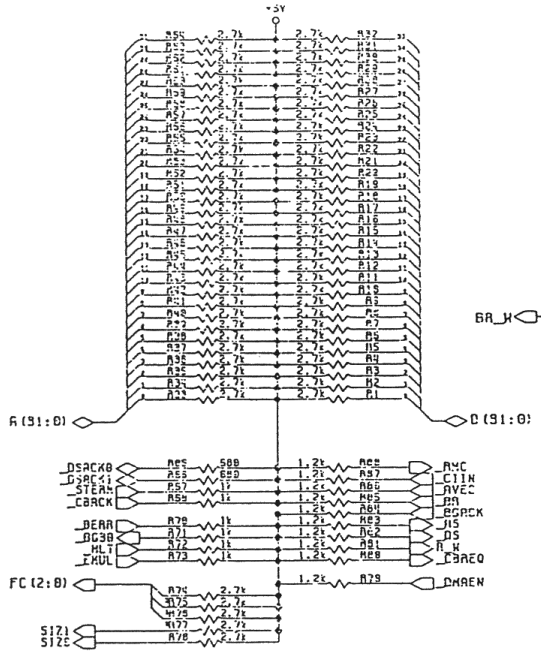

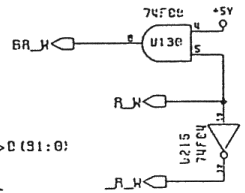

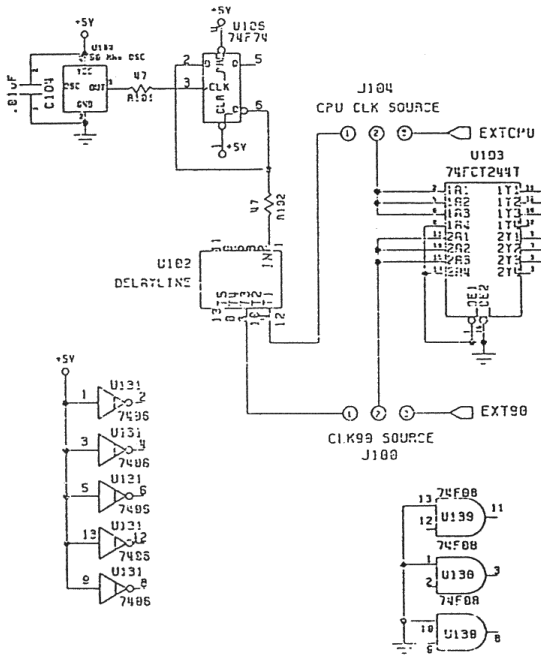

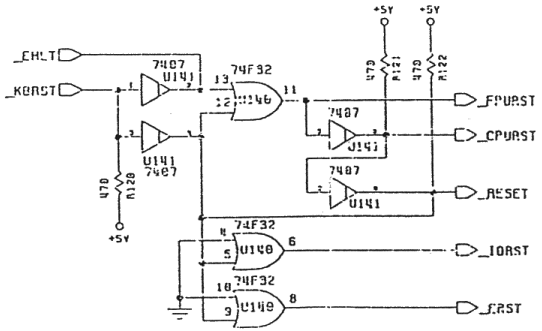

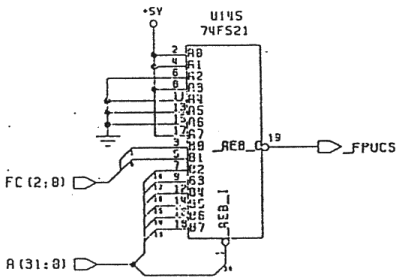

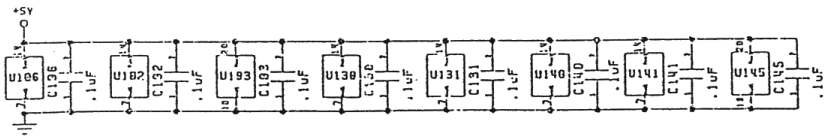

CPU, FPU, CLOCKS, etc.

© 1990 COMMODORE BUSINESS MACHINES
Information contained herein is the unpublished, confidential and trade secret property of Commodore Business Machines, Inc. Any use, reproduction or disclosure of this information without the prior written permission of Commodore is strictly prohibited.

C.A.D. Generated
No manual changes may be made to this document

Commodore
SCHEMATIC
A3400/A4000
SIZE C 364836 R
SCALE NONE SHEET 5 OF 17

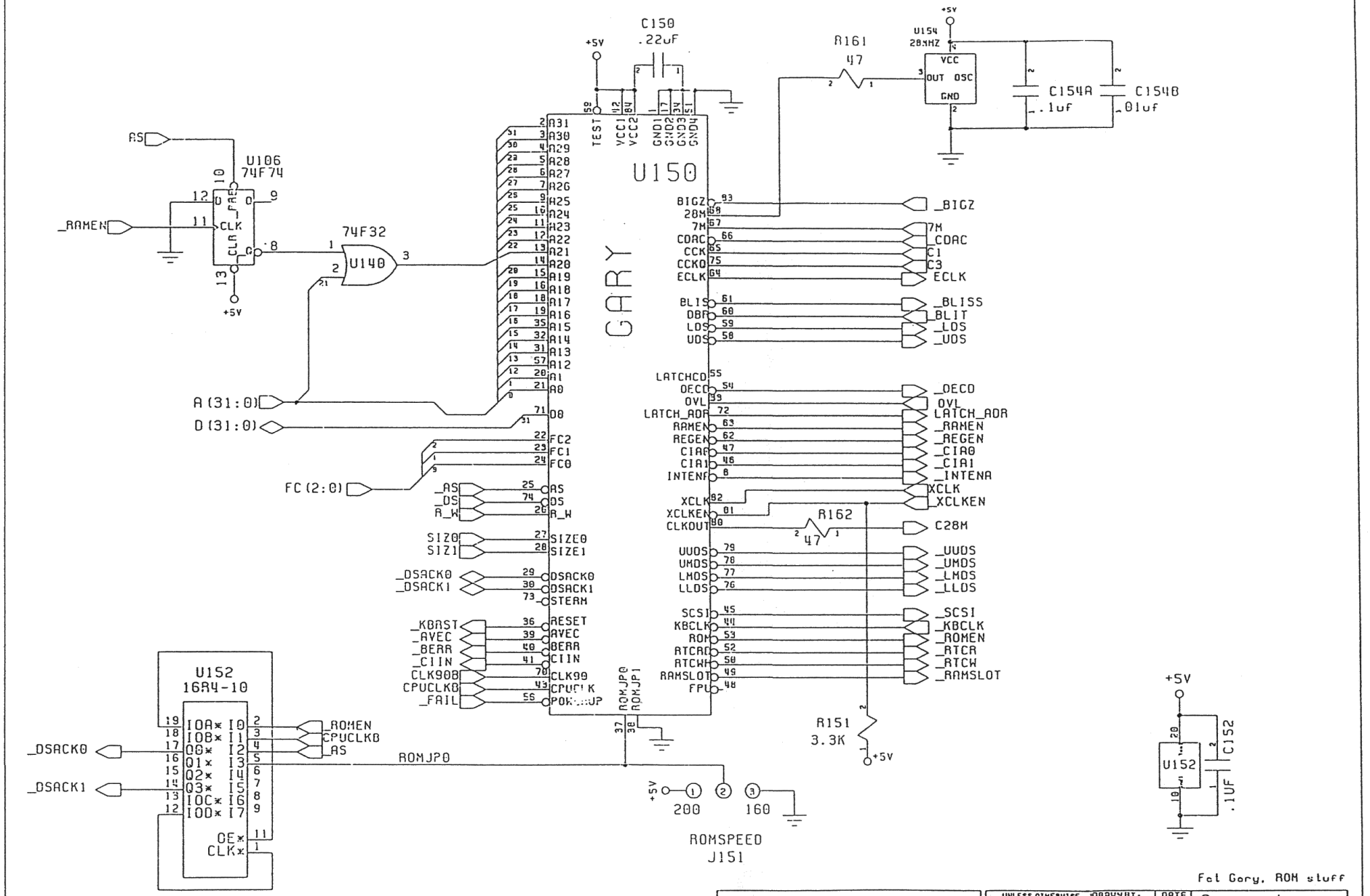

Fel Gary, ROM stuff

© 1990 COMMODORE BUSINESS MACHINES
Information contained herein is the unpublished, confidential and trade secret property of Commodore Business Machines, Inc. Any use, reproduction or disclosure of this information without the prior written permission of Commodore is strictly prohibited.

C.A.D. Generated
No manual changes may be made to this document

UNLESS OTHERWISE SPECIFIED
.X ± .XX ± .XXX ± ∠ ±5

DRAWN BY: GREG BERLIN
CHKD:
ENGR: GCB
APPR:

MATERIAL:
FINISH:
USED ON A3400
NEXT ASSY

Commodore
SCHEMATIC
A3400/A4000

SIZE C | 364836 | REV 2
SCALE NONE | SHEET 4 OF 17

PATH: /proj=al/ea1080/pcb_=+v6 gary

150-174

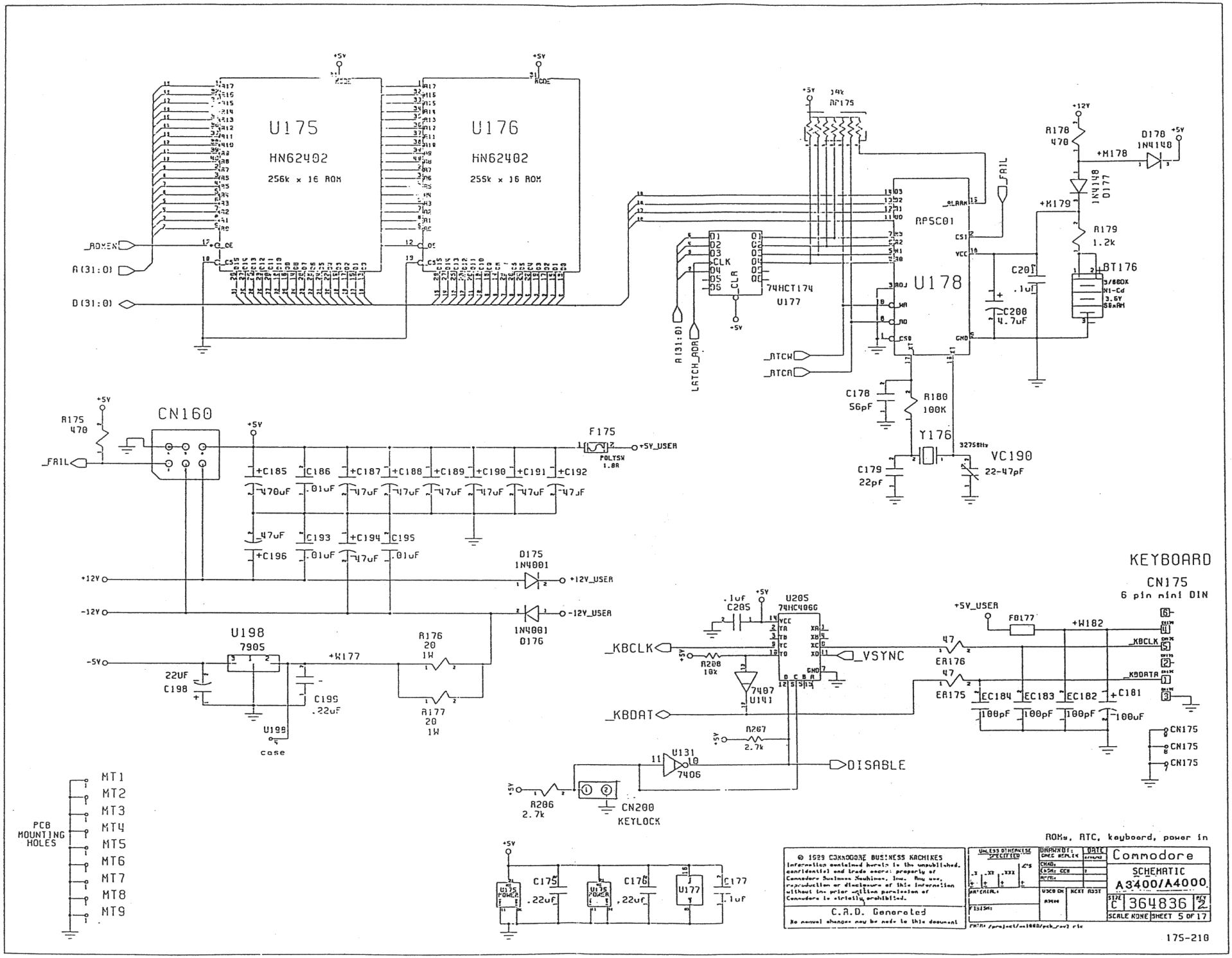
U175
HN62402
256k x 16 ROM
U176
HN62402
256k x 16 ROM
_ROMEN
A(31:0)
D(31:0)
74HCT174
U177
LATCH_ROM
RPSC01
U178
_ATCW
_ATCA
_FAIL
R178
470
D178
1N4148
+M178
D177
1N4148
+K179
R179
1.2k
BT176
3/8BOX
Ni-Cd
3.6V
50mAH
C201
.1uF
C200
4.7uF
C178
56pF
R180
100K
Y176
32768Hz
VC190
22-47pF
C179
22pF
CN160
R175
470
F175
POLYSW
1.8A
+5V_USER
+C185
C186
+C187
+C188
+C189
+C190
+C191
+C192
470uF
.01uF
47uF
C193
+C194
C195
+C196
D175
1N4001
+12V_USER
-12V_USER
1N4001
D176
U198
7905
22UF
C198
+W177
C199
.22uF
R176
20
1W
R177
20
1W
U199
case
KEYBOARD
CN175
6 pin mini DIN
U205
74HC4066
.1uf
C205
_KBCLK
_VSYNC
_KBDAT
R208
10k
7407
U141
R267
2.7k
U131
7406
DISABLE
R206
2.7k
CN200
KEYLOCK
+5V_USER
F0177
+W182
R176
47
R175
47
EC184
EC183
EC182
C181
100pF
100uF
CN175
PCB
MOUNTING
HOLES
MT1
MT2
MT3
MT4
MT5
MT6
MT7
MT8
MT9
C175
.22uF
C176
.22uF
U177
C177
.1uf
ROMs, RTC, keyboard, power in
© 1989 COMMODORE BUSINESS MACHINES
C.A.D. Generated
Commodore
SCHEMATIC
A3400/A4000
SIZE C 364836 REV 2
SCALE NONE SHEET 5 OF 17
175-210

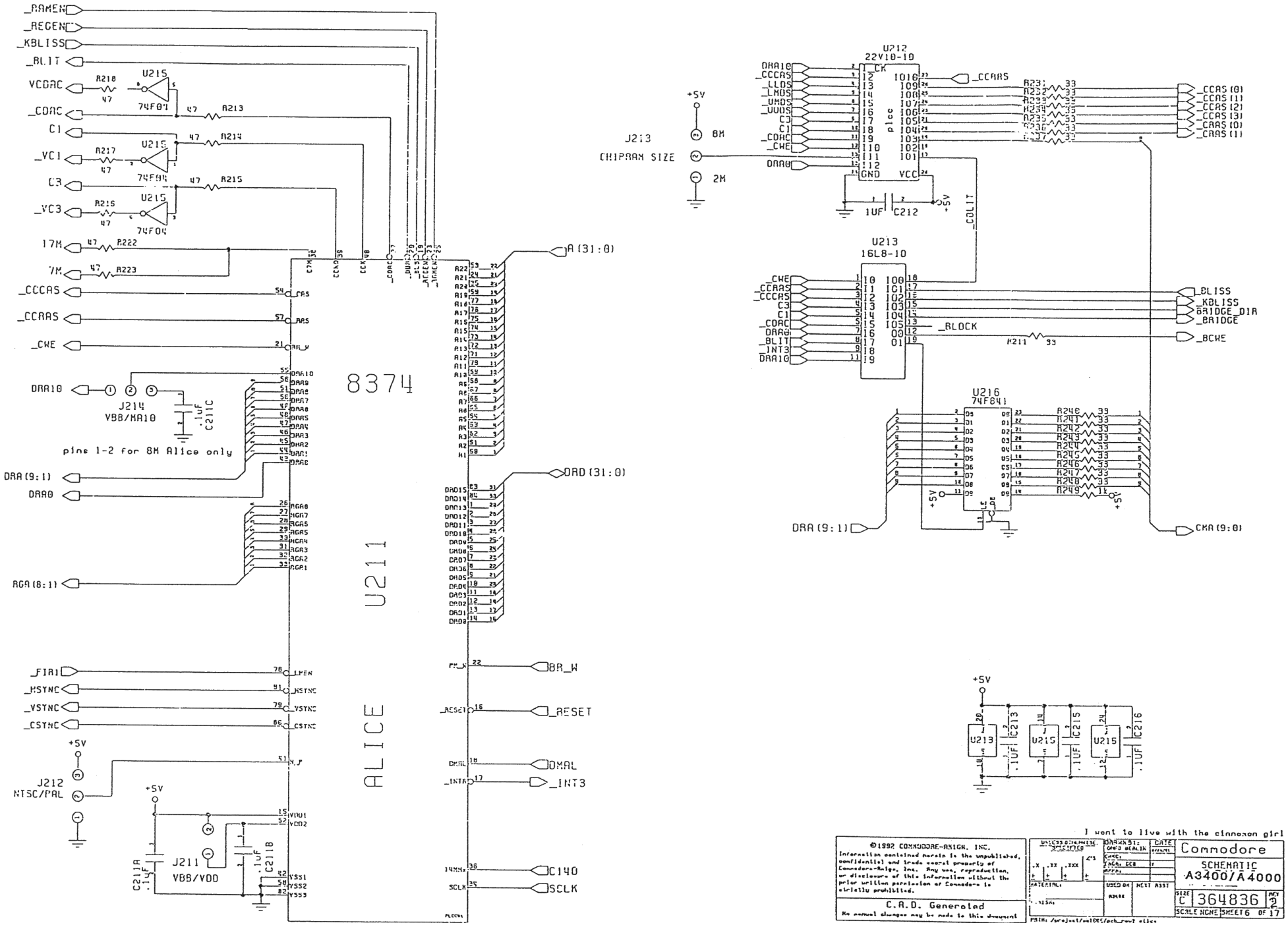
ALICE U211
8374
A(31:0)
DRD(31:0)
DRA(9:1)
DRA0
RGA(8:1)
CKA(9:0)
BR_W
_RESET
DMAL
_INT3
C140
SCLK
_RAMEN
_REGEN
_KBLISS
_BLIT
VCDAC
_CDAC
C1
_VC1
C3
_VC3
17M
7M
_CCCAS
_CCRAS
_CWE
DRA10
J214
VBB/MA10
pins 1-2 for 8M Alice only
_FIRI
_HSYNC
_VSYNC
_CSYNC
J212
NTSC/PAL
J211
VBB/VDD
Install J211 if VDD (+5) is on pin 52
U212
22V10-10
J213
CHIPRAM SIZE
8M
2M
U213
16L8-10
U216
74F841
_CCAS(0)
_CCAS(1)
_CCAS(2)
_CCAS(3)
_CRAS(0)
_CRAS(1)
_BLISS
_KBLISS
_BRIDGE_DIR
_BRIDGE
_BCWE
_BLOCK
U213
U215
U215
U216
.1UF C213
.1UF C215
.1UF C216
I want to live with the cinnamon girl
©1992 COMMODORE-AMIGA, INC.
Information contained herein is the unpublished, confidential and trade secret property of Commodore-Amiga, Inc. Any use, reproduction, or disclosure of this information without the prior written permission of Commodore is strictly prohibited.
C.A.D. Generated
No manual changes may be made to this document
Commodore
SCHEMATIC
A3400/A4000
364836
SCALE NONE
SHEET 6 OF 17
211-249

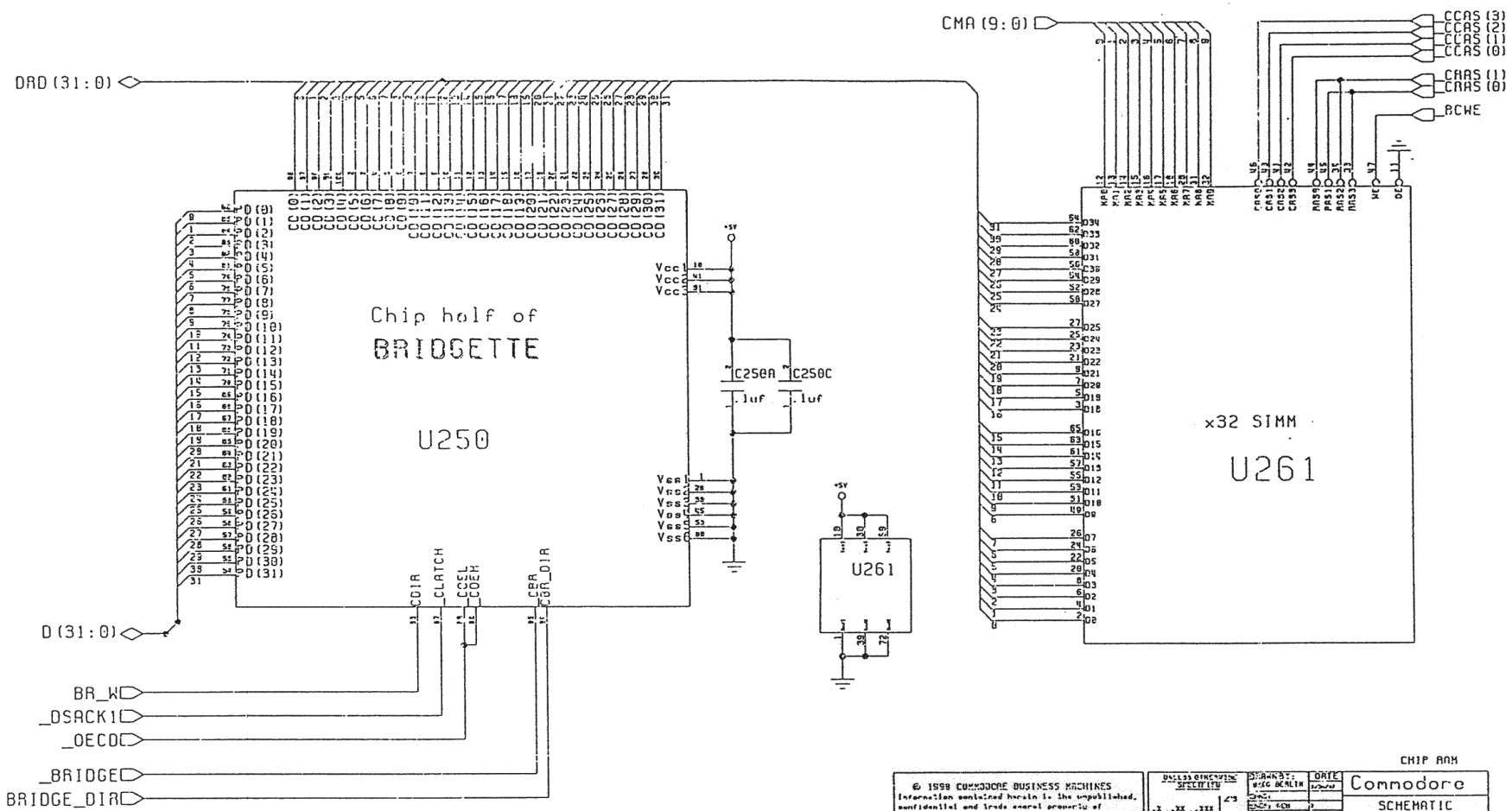

© 1990 COMMODORE BUSINESS MACHINES
Information contained herein is the unpublished, confidential and trade secret property of Commodore Business Machines, Inc. Any use, reproduction or disclosure of this information without the prior written permission of Commodore is strictly prohibited.

C.A.D. Generated
No manual changes may be made to this document

UNLESS OTHERWISE SPECIFIED
.X ± .XX ± .XXX ± ∠°
MATERIAL:
FINISH:

DRAWN BY: WAG BERLIN
DATE
DESIGN BY:
NEXT ASSY:

Commodore
SCHEMATIC
A3400/A4000
SIZE C 364836 REV 2
SCALE NONE SHEET 7 OF 17

PATH: /projects/a1990/sch_rev7 chipres

CHIP RAM

250-299

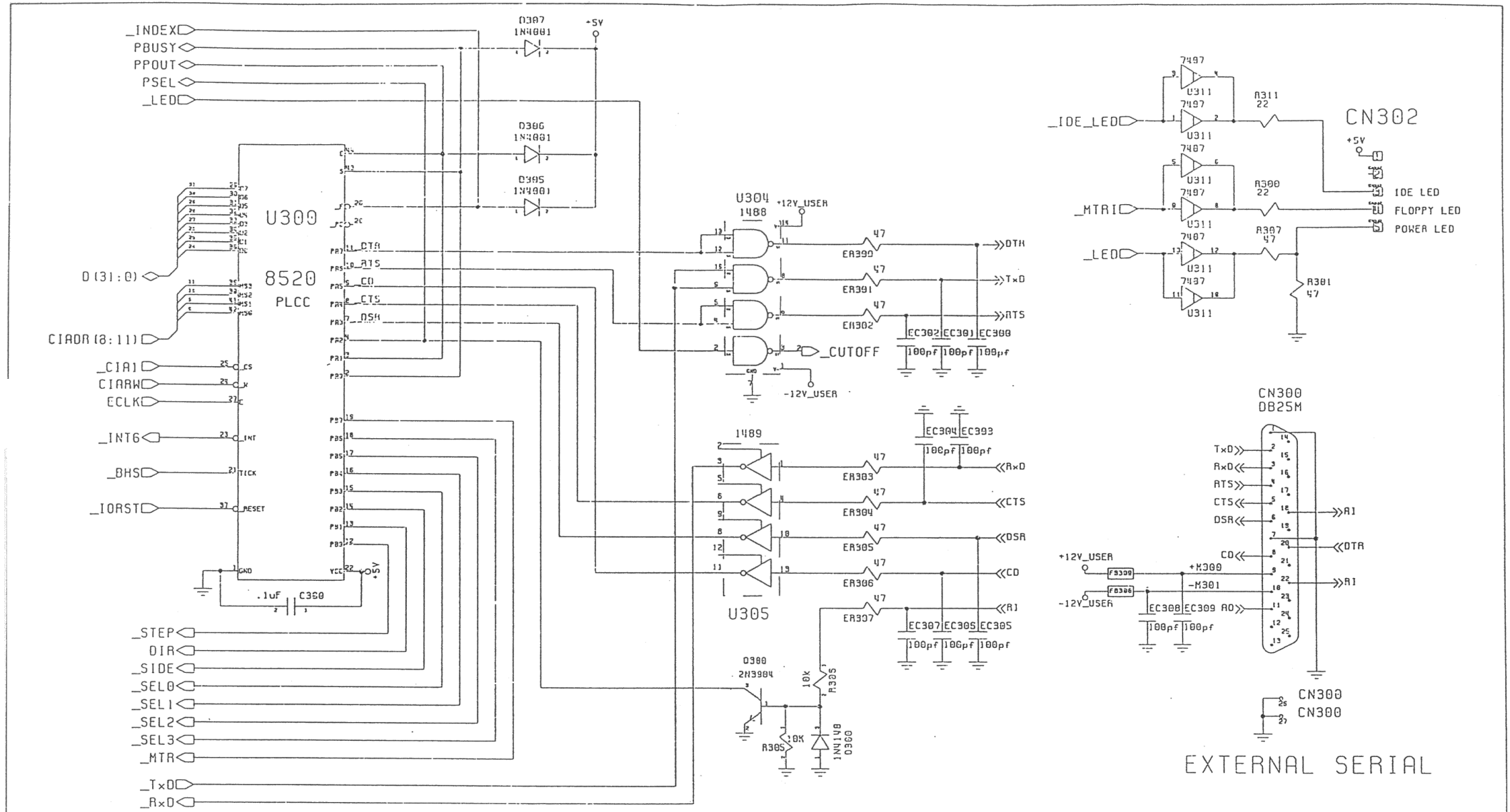
_INDEX
PBUSY
PPOUT
PSEL
_LED
D307 1N4001
D306 1N4001
D305 1N4001
+5V
U300
8520
PLCC
D(31:0)
CIADR(8:11)
_CIA1
CIARW
ECLK
_INT6
_BHS
_IORST
_STEP
DIR
_SIDE
_SEL0
_SEL1
_SEL2
_SEL3
_MTR
_TxD
_RxD
.1uF C300
U304 1488
+12V_USER
-12V_USER
_CUTOFF
DTR
TxD
RTS
EC302 EC301 EC300 100pf
1489
U305
RxD
CTS
DSR
CD
RI
EC304 EC303 100pf
EC307 EC305 EC305 100pf
Q300 2N3904
R305 10K
1N4148 D300
_IDE_LED
_MTRI
_LED
7407 U311
R311 22
R300 22
R307 47
R301 47
CN302
IDE LED
FLOPPY LED
POWER LED
CN300 DB25M
+12V_USER
-12V_USER
+M300
-M301
EC308 EC309 100pf
CN300
EXTERNAL SERIAL
+5V
U305
U311
C305 .1uF
C311 .1uF
AO
C318 22uF 16V
R302 1K
AUDOUT
AI
C317 22uF 16V
AUDIN
Serial Port
Commodore
SCHEMATIC
A3400/A4000
C 364836 REV 2
SCALE NONE
SHEET 8 OF 17
C.A.O. Generated
300-349

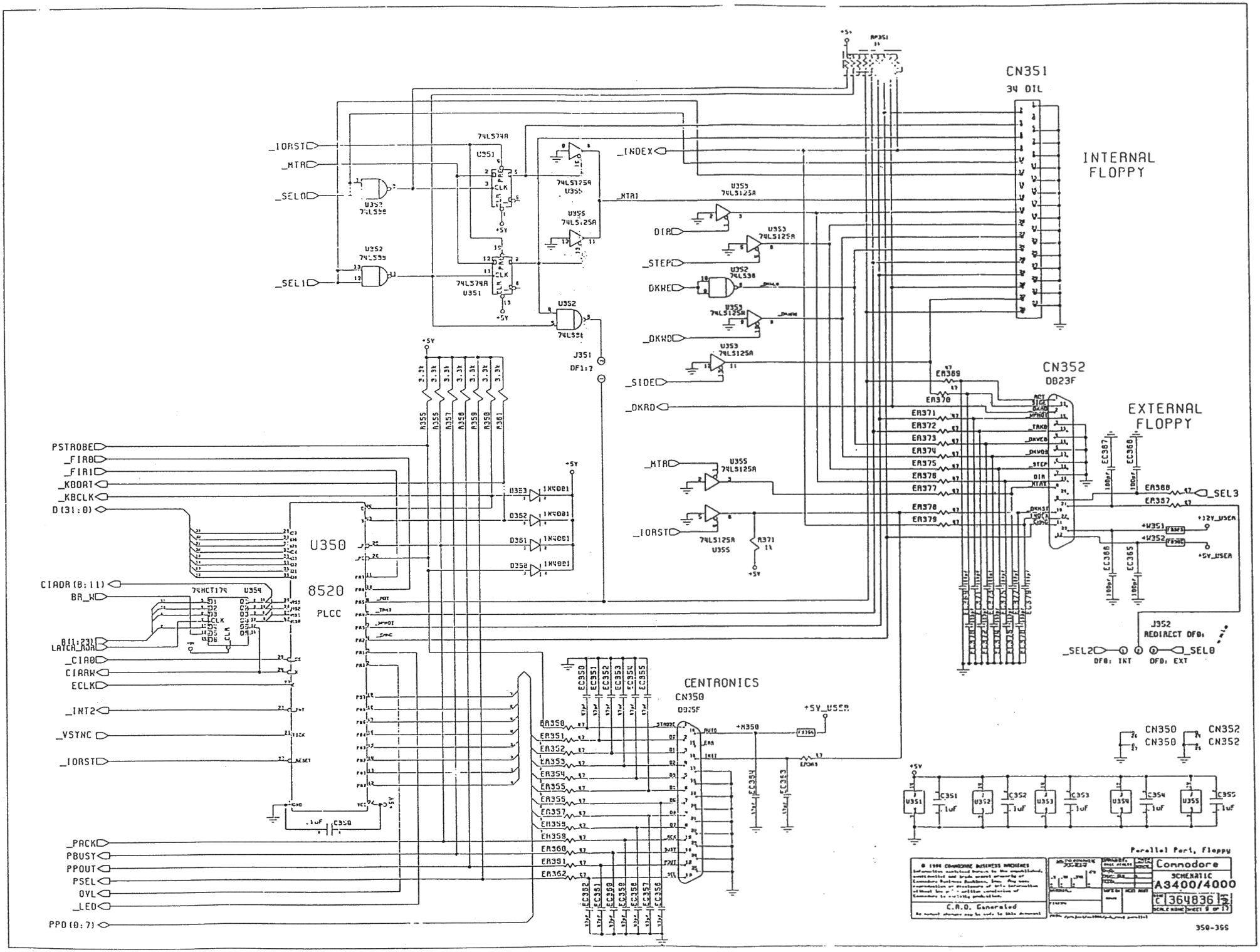
CN351
34 DIL
INTERNAL FLOPPY
CN352
DB23F
EXTERNAL FLOPPY
U350
8520
PLCC
CENTRONICS
CN350
DB25F
J351
DF1:7
J352
REDIRECT DF0:
DF0: INT
DF0: EXT
_IORST
_MTR
_SEL0
_SEL1
_INDEX
_MTR1
DIR
_STEP
DKWE
_DKWD
_SIDE
_DKRD
PSTROBE
_FIR0
_FIR1
_KBDAT
_KBCLK
D(31:0)
CIADR(8:11)
BR_H
LATCH_ADR
_CIA0
CIARW
ECLK
_INT2
_VSYNC
_PACK
PBUSY
PPOUT
PSEL
OVL
_LED
PPD(0:7)
+5V_USER
+12V_USER
_SEL3
_SEL2
_SEL0
CN350 CN352
Parallel Port, Floppy
Commodore
SCHEMATIC
A3400/4000
C 364836
C.A.D. Generated
350-365

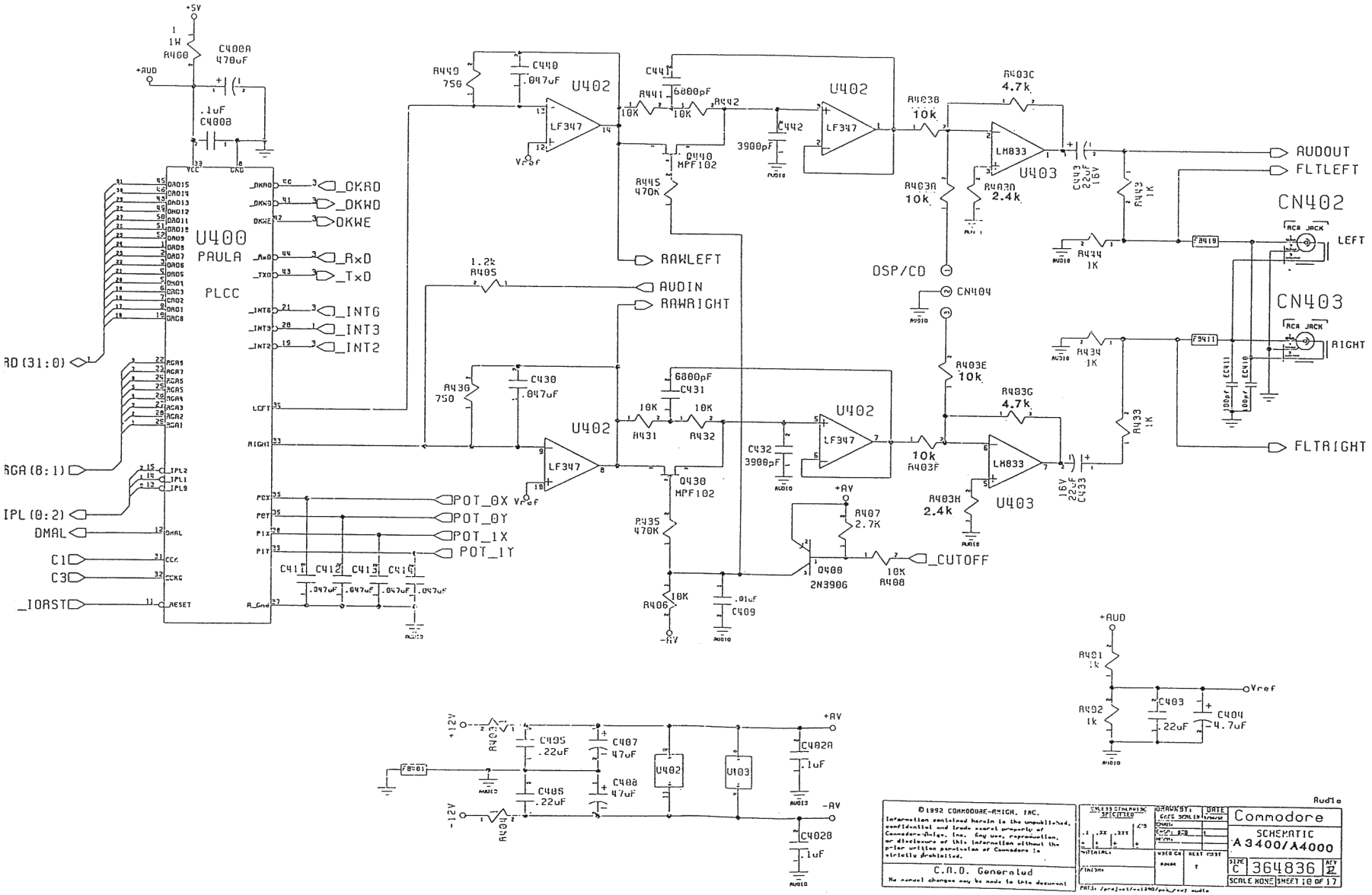

©1992 COMMODORE-AMIGA, INC.
Information contained herein is the unpublished, confidential and trade secret property of Commodore-Amiga, Inc. Any use, reproduction, or disclosure of this information without the prior written permission of Commodore is strictly prohibited.

C.A.D. Generated
No manual changes may be made to this document

UNLESS OTHERWISE SPECIFIED
DRAWN BY: GREG SCALES
DATE: 1/9/92
CHKD:
ENGR:
MFGRY:
WITH INITIALS
/INIT
WORD CH: AMAR
NEXT ASSY: T

Commodore
SCHEMATIC
A3400/A4000
SIZE C
364836
REV 2
SCALE NONE
SHEET 10 OF 17

400-449

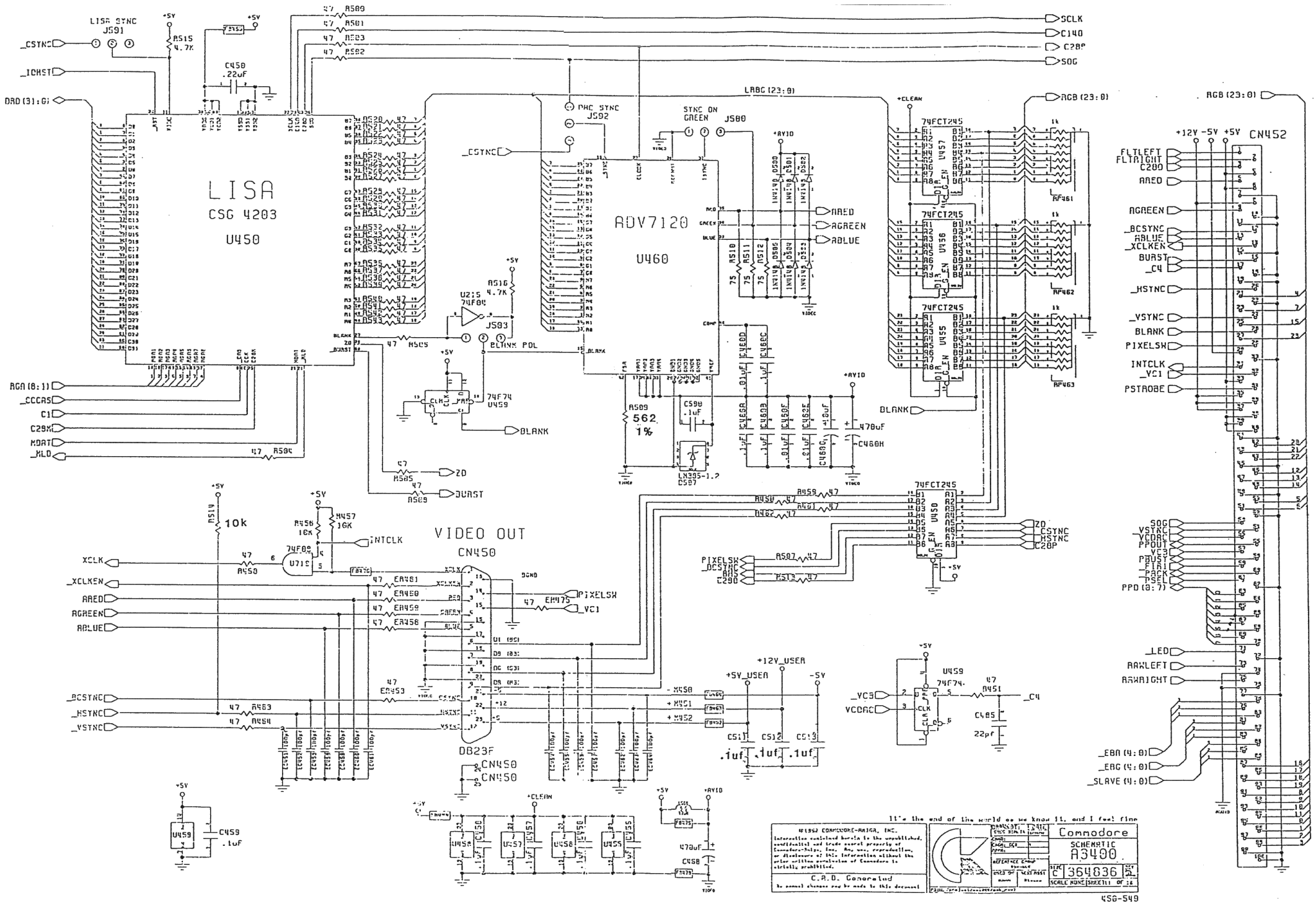
LISA
CSG 4203
U450
ADV7120
U460
VIDEO OUT
CN450
DB23F
CN452
LISA SYNC
J591
PAC SYNC
J592
SYNC ON
GREEN
J580
BLANK POL
J593
74FCT245
74F74
U459
74F08
U215
LN395-1.2
D597
SCLK
C140
C28P
SOG
RGB (23:0)
LRGB (23:0)
DRD (31:0)
RGA (8:1)
_CSYNC
_ICHST
_CCCAS
C1
C28M
MDAT
_MLD
_BURST
ZD
_INTCLK
XCLK
_XCLKEN
AREED
AGREEN
ABLUE
_BCSYNC
_HSYNC
_VSYNC
PIXELSW
_VC1
BLANK
+5V
+12V_USER
-5V
+12V
+AVID
+CLEAN
_VC5
VCDAC
_C4
_EBA (4:0)
_EBG (4:0)
_SLAVE (4:0)
FLTLEFT
FLTRIGHT
C280
_XCLKEN
_BURST
_C4
_HSYNC
_VSYNC
BLANK
PIXELSW
INTCLK
_VC1
PSTROBE
SOG
_VSYNC
_VCDAC
PPOUT
_VC5
PRUST
_FIRE
_PACK
_PSEL
PPD (8:7)
_LED
RAWLEFT
RAWRIGHT
Commodore
SCHEMATIC
A3400
C 364836
SCALE NONE
SHEET 1 OF 16
C.A.D. Concealed
4SG-549

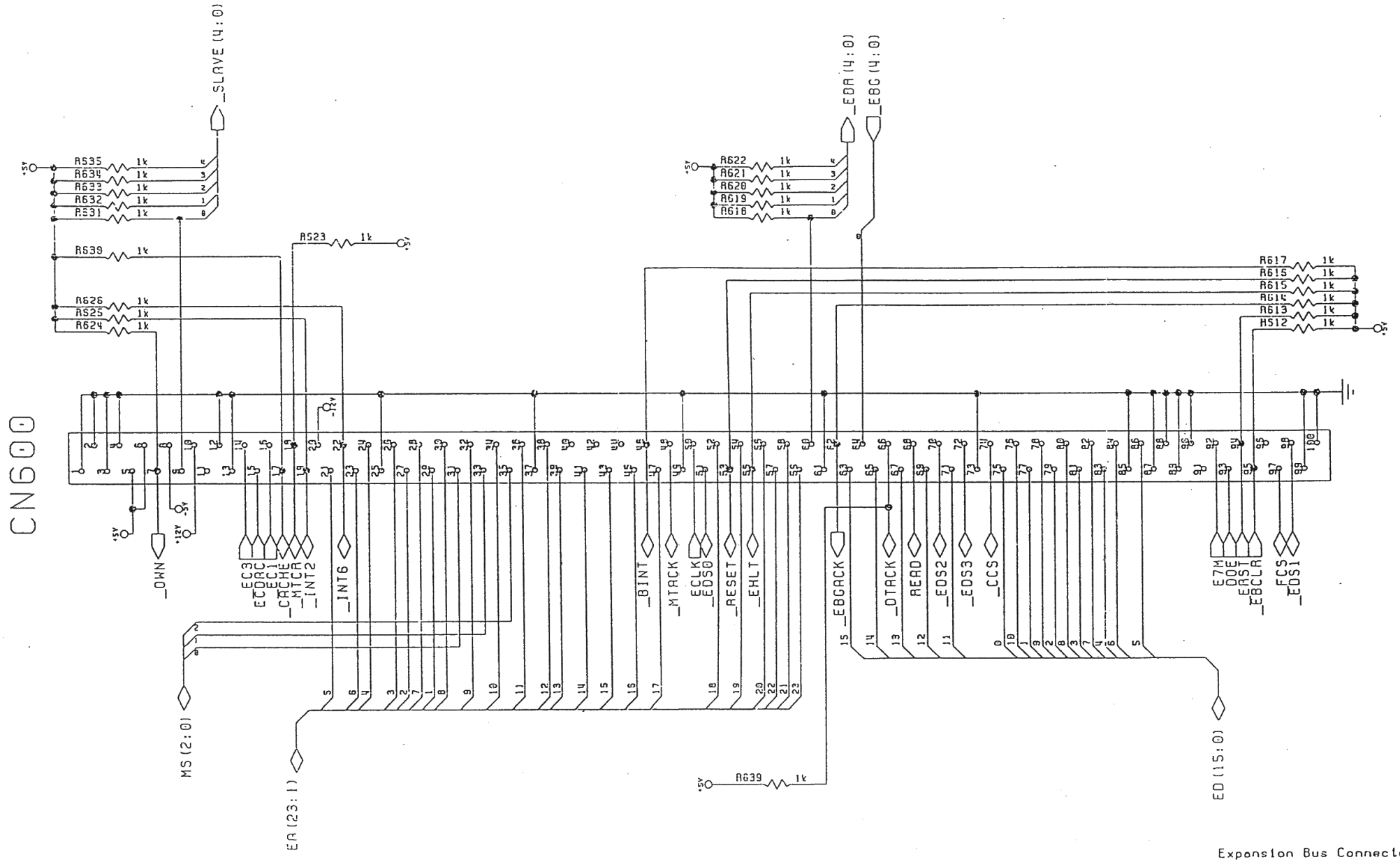

Expansion Bus Connector

© 1989 COMMODORE BUSINESS MACHINES
Information contained herein is the unpublished, confidential and trade secret property of Commodore Business Machines, Inc. Any use, reproduction or disclosure of this information without the prior written permission of Commodore is strictly prohibited.

C.A.D. Generated
No manual changes may be made to this document

DRAWN BY: GREG BEHLIN	DATE 3/30/88	Commodore
CHKD:		SCHEMATIC
ENGR: GCB		A3400/A4000
APPR:		
USED ON A3400	NEXT ASSY	SIZE C 364836 REV 2
		SCALE NONE SHEET 12 OF 17

PATH: /project/am1000/pcb_rev7 188min

600-649

Amiga 32 BIT LOCAL SLOT

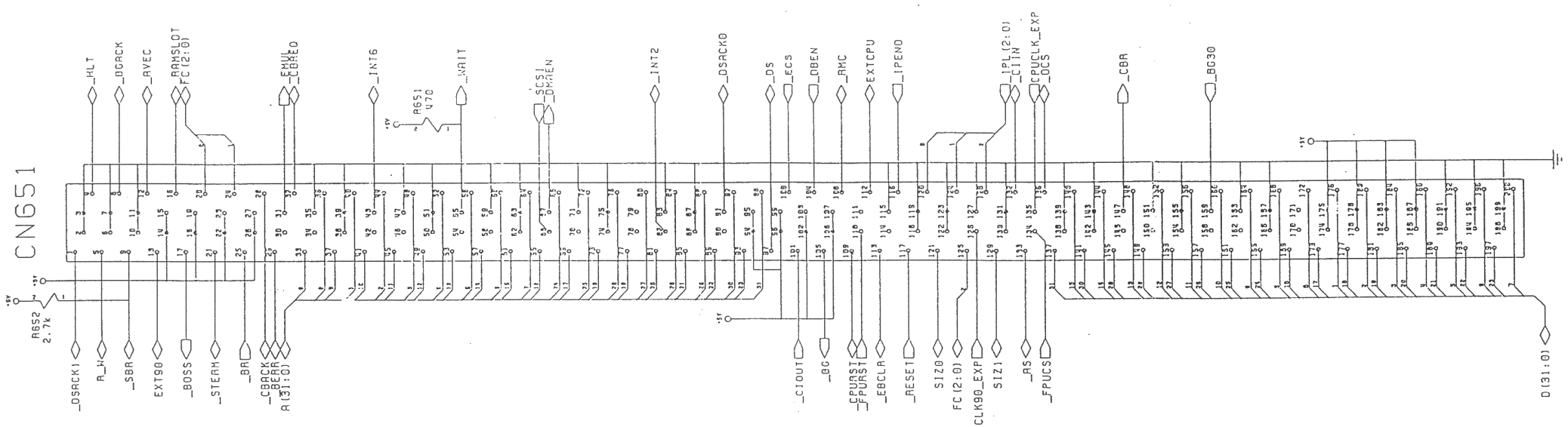

Local Bus / Coprocessor Connector

© 1990 COMMODORE BUSINESS MACHINES
Information contained herein is the unpublished, confidential and trade secret property of Commodore Business Machines, Inc. Any use, reproduction or disclosure of this information without the prior written permission of Commodore is strictly prohibited.

C.A.D. Generated
No manual changes may be made to this document

DRAWN BY: CHUCK BEPLER | DATE 03/26/91
CHECK
ENGR: DCE
APPR:
USED ON: A2386 | NEXT ASSY

Commodore
SCHEMATIC
A3400/A4000

SIZE C | 364836 | REV 2
SCALE NONE | SHEET 13 OF 17

PATH: /pro/pcb/rev1991/pcb_rev3 coprocessor

650-699

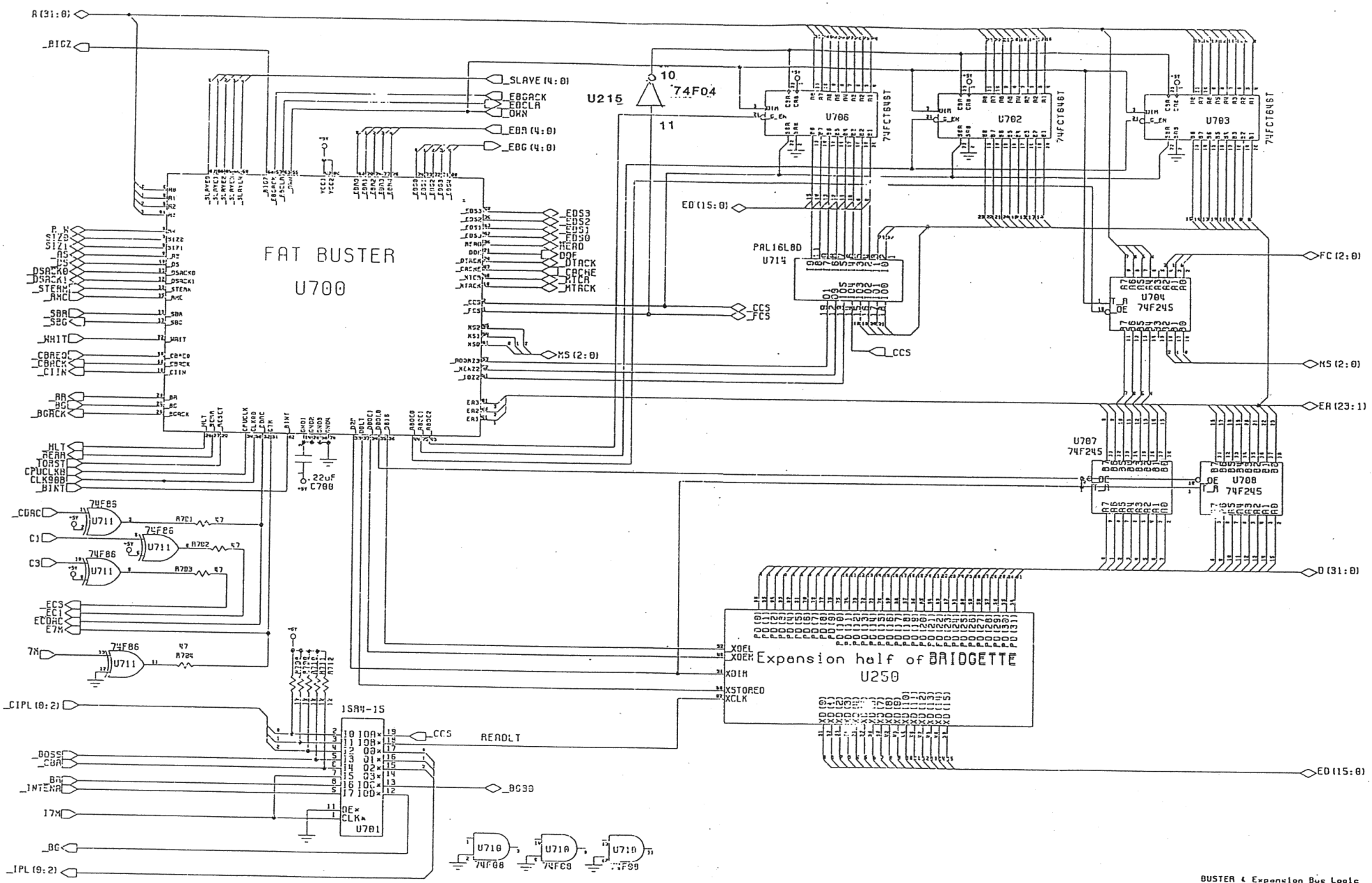

BUSTER & Expansion Bus Logic

© 1992 COMMODORE BUSINESS MACHINES
Information contained herein is the unpublished, confidential and trade secret property of Commodore Business Machines, Inc. Any use, reproduction or disclosure of this information without the prior written permission of Commodore is strictly prohibited.

C.A.D. Generated

No manual changes may be made to this document

DRAWN BY: DATE

Commodore

SCHEMATIC

A3400/A4000

SIZE C 364836 REV 2

SCALE NONE SHEET 14 OF 17

700-749

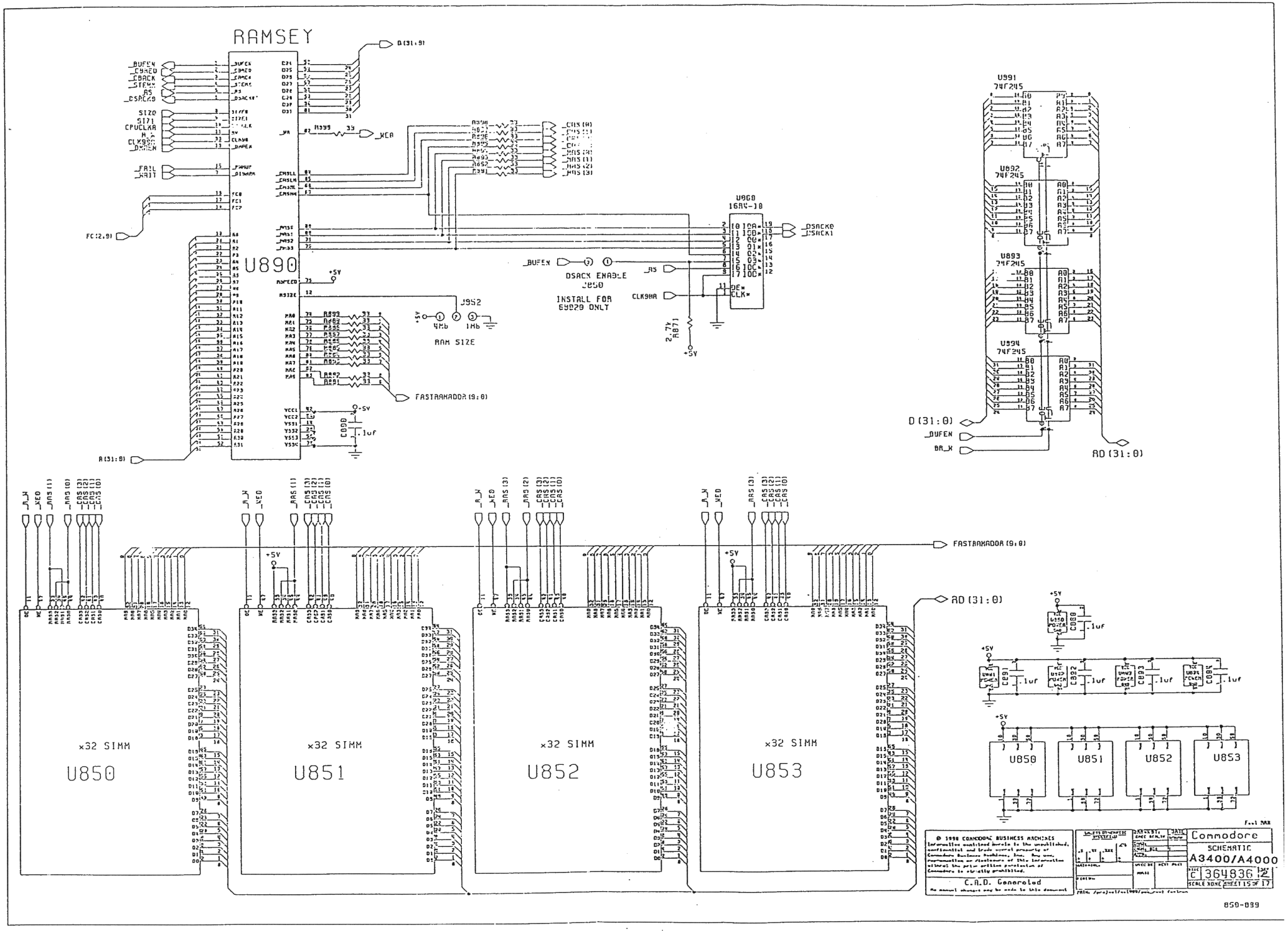
RAMSEY
U890
D(31:0)
A(31:0)
FC(2:0)
SIZE0
SIZ1
CPUCLKA
CLK90A
AS
_DSACK0
_DSACK1
_BUFEN
_RAS
_WEA
_CAS(0)
_CAS(1)
_CAS(2)
_CAS(3)
_RAS(0)
_RAS(1)
_RAS(2)
_RAS(3)
U868
16R4-10
DSACK ENABLE
J850
INSTALL FOR
69020 ONLY
J952
4Mb
1Mb
RAM SIZE
FASTRAMADDR(9:0)
C890
.1uf
U991
74F245
U892
74F245
U893
74F245
U894
74F245
D(31:0)
_BUFEN
RA_W
AD(31:0)
_A_W
_WEA
FASTRAMADDR(9:0)
AD(31:0)
x32 SIMM
U850
x32 SIMM
U851
x32 SIMM
U852
x32 SIMM
U853
C891
C892
C893
C894
U850
U851
U852
U853
© 1990 COMMODORE BUSINESS MACHINES
Information contained herein is the unpublished, confidential and trade secret property of Commodore Business Machines, Inc. Any use, reproduction or disclosure of this information without the prior written permission of Commodore is strictly prohibited.
C.A.D. Generated
No manual changes may be made to this document
Commodore
SCHEMATIC
A3400/A4000
C 364836 12
SCALE NONE
SHEET 15 OF 17
859-039

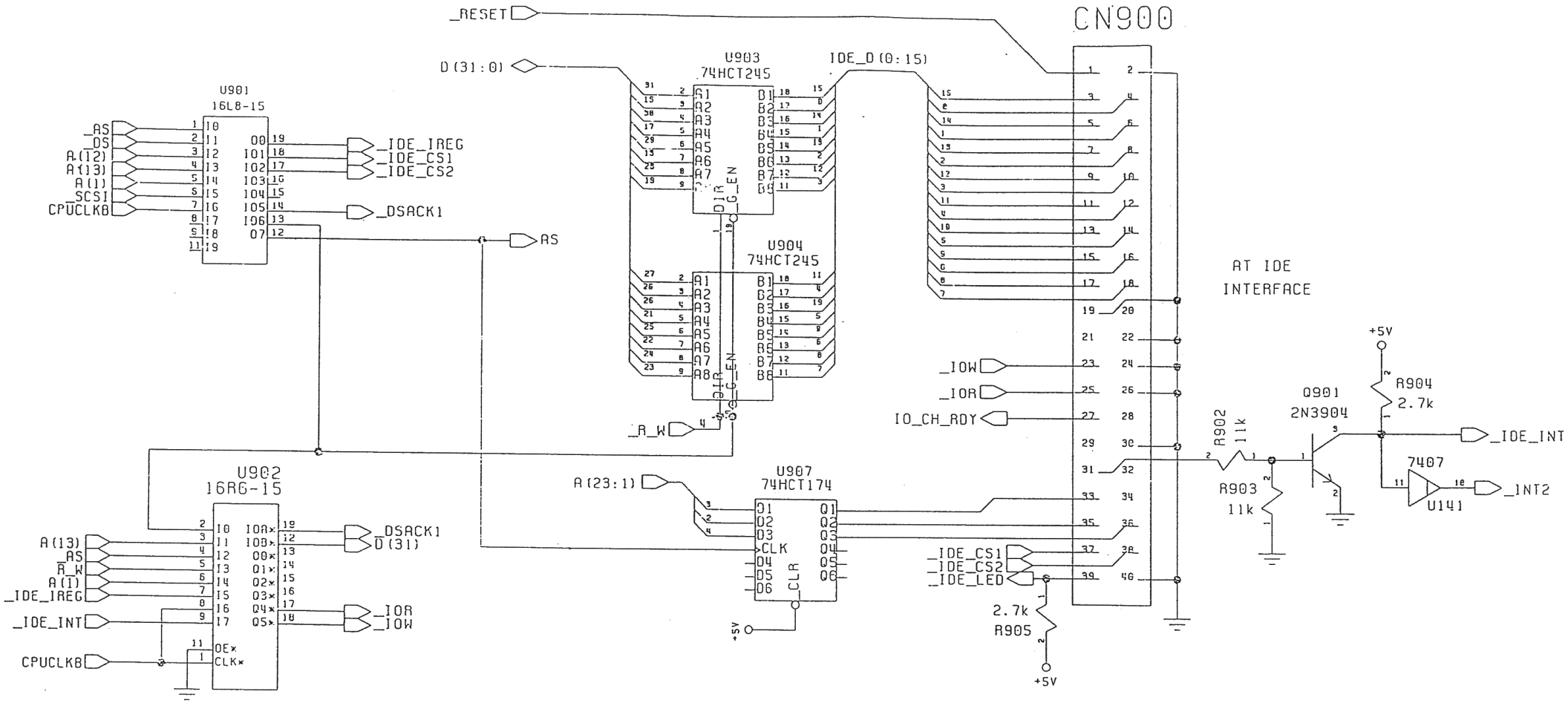

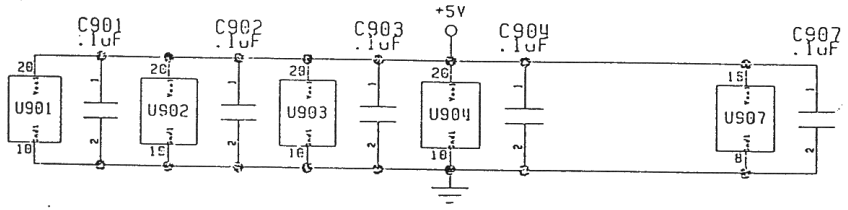

AT IDE Hard Disk Interface

© 1999 COMMODORE BUSINESS MACHINES
Information contained herein is the unpublished, confidential and trade secret property of Commodore Business Machines, Inc. Any use, reproduction or disclosure of this information without the prior written permission of Commodore is strictly prohibited.

C.A.D. Generated
No manual changes may be made to this document

UNLESS OTHERWISE SPECIFIED
.X ± .XX ± .XXX ± ∠'S ±
MATERIAL:
FINISH:

DRAWN BY: AUGI	DATE 3/30/92	
CHKD:		
ENGR: JEA	3/31/92	
APPR:		
USED ON A3400	NEXT ASSY XXXXXX	

Commodore
SCHEMATIC
A3400/A4000

SIZE C 364836 REV 2
SCALE NONE SHEET 16 OF 17

PATH: /project/a=1603/pcb_rev2 harddisk

900-949

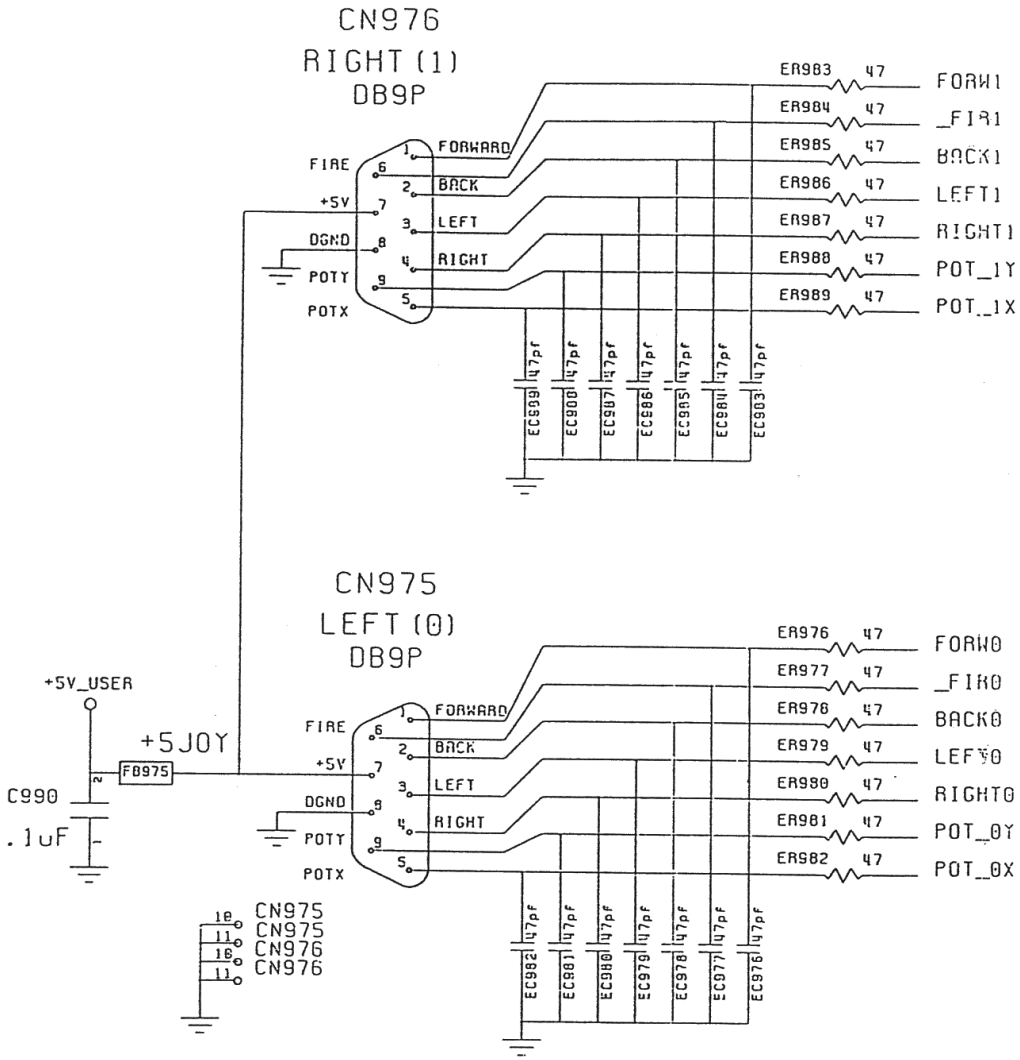

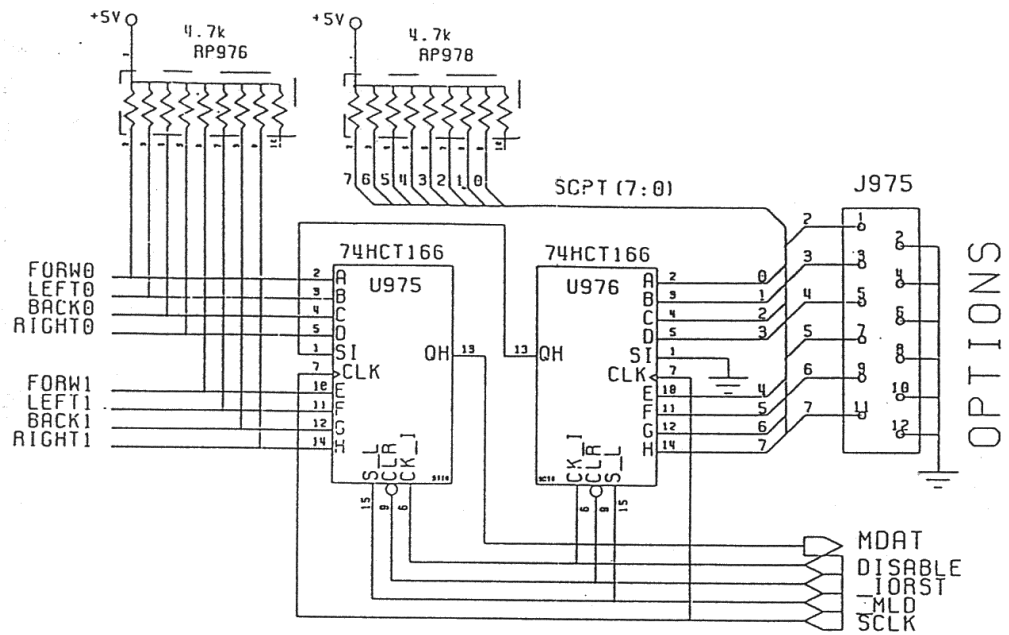

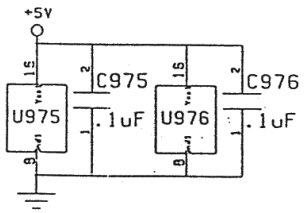

Mouse & Joystick connectors

© 1986 COMMODORE BUSINESS MACHINES
Information contained herein is the unpublished, confidential and trade secret property of Commodore Business Machines, Inc. Any use, reproduction or disclosure of this information without the prior written permission of Commodore is strictly prohibited.

C.A.D. Generated
No manual changes may be made to this document

UNLESS OTHERWISE SPECIFIED
.X ± .XX ± .XXX ± ∠'S ±
MATERIAL:
FINISH:

DRAWN BY:	DATE
GREG BERLIN	3/24/92
CHKD:	
ENGR: CCB	7
APPR:	

USED ON: A3400
NEXT ASST: 7

PATH: /project/ae1000/pcb_rev7 joystick

Commodore
SCHEMATIC
A3400/ A4000
SIZE C | 364836 | REV 2
SCALE NONE | SHEET 17 OF 17

975-999