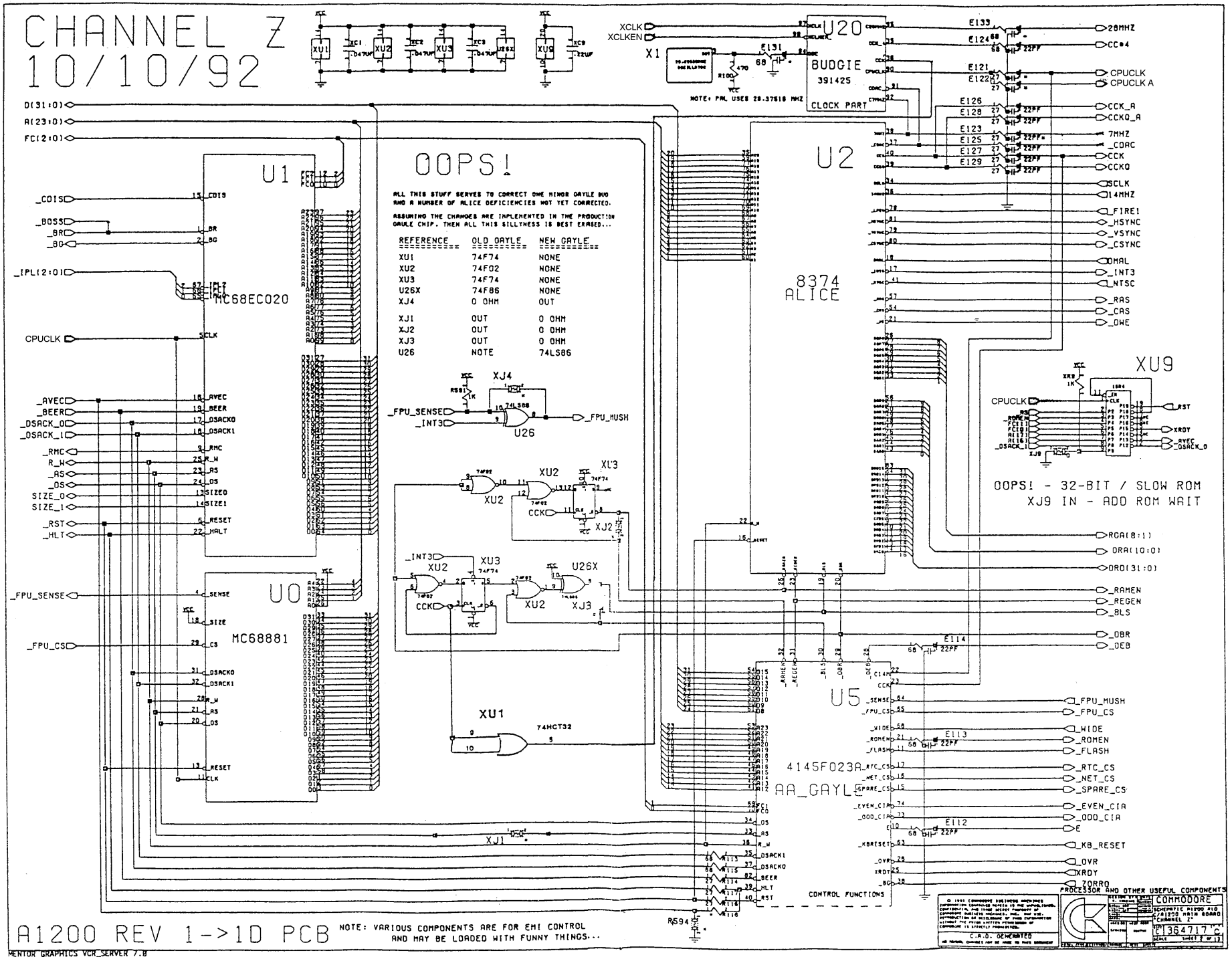
CHANNEL Z
10/10/92
OOPS!
ALL THIS STUFF SERVES TO CORRECT OWE MINOR GAYLE BUG AND A NUMBER OF ALICE DEFICIENCIES NOT YET CORRECTED.
ASSUMING THE CHANGES ARE IMPLEMENTED IN THE PRODUCTION GAYLE CHIP, THEN ALL THIS SILLYNESS IS BEST ERASED...
REFERENCE | OLD GAYLE | NEW GAYLE
XU1 | 74F74 | NONE
XU2 | 74F02 | NONE
XU3 | 74F74 | NONE
U26X | 74F86 | NONE
XJ4 | 0 OHM | OUT
XJ1 | OUT | 0 OHM
XJ2 | OUT | 0 OHM
XJ3 | OUT | 0 OHM
U26 | NOTE | 74LS86
U1
MC68EC020
U0
MC68881
U2
8374
ALICE
U20
BUDGIE
391425
CLOCK PART
NOTE: PAL USES 28.37516 MHZ
U5
4145F023A
AA_GAYLE
CONTROL FUNCTIONS
XU9
OOPS! - 32-BIT / SLOW ROM
XJ9 IN - ADD ROM WAIT
XU1
74HCT32
XU2
XU3
U26X
XJ3
XJ4
U26
D(31:0)
A(23:0)
FC(2:0)
_CDIS
_BOSS
_BR
_BG
_IPL(2:0)
CPUCLK
_AVEC
_BEER
_DSACK_0
_DSACK_1
_RMC
R_W
_AS
_DS
SIZE_0
SIZE_1
_RST
_HLT
_FPU_SENSE
_FPU_CS
_INT3
CCK
XCLK
XCLKEN
X1
28MHZ
CC#4
CPUCLK
CPUCLK A
CCK_A
CCKQ_A
7MHZ
_CDAC
CCK
CCKQ
SCLK
14MHZ
_FIRE1
_HSYNC
_VSYNC
_CSYNC
DMAL
_INT3
NTSC
_RAS
_CAS
_DWE
RGA(8:1)
DRA(10:0)
DRD(31:0)
_RAMEN
_REGEN
_BLS
_DBR
_DEB
_FPU_MUSH
_WIDE
_ROMEN
_FLASH
_RTC_CS
_NET_CS
_SPARE_CS
_EVEN_CIA
_ODD_CIA
E
_KB_RESET
_OVR
XRDY
ZORRO
PROCESSOR AND OTHER USEFUL COMPONENTS
COMMODORE
SCHEMATIC REV00 #10
A1200 MAIN BOARD
CHANNEL Z
C364717 C
C.A.D. GENERATED
A1200 REV 1->1D PCB
NOTE: VARIOUS COMPONENTS ARE FOR EMI CONTROL AND MAY BE LOADED WITH FUNNY THINGS...
MENTOR GRAPHICS VCR_SERVER 7.0

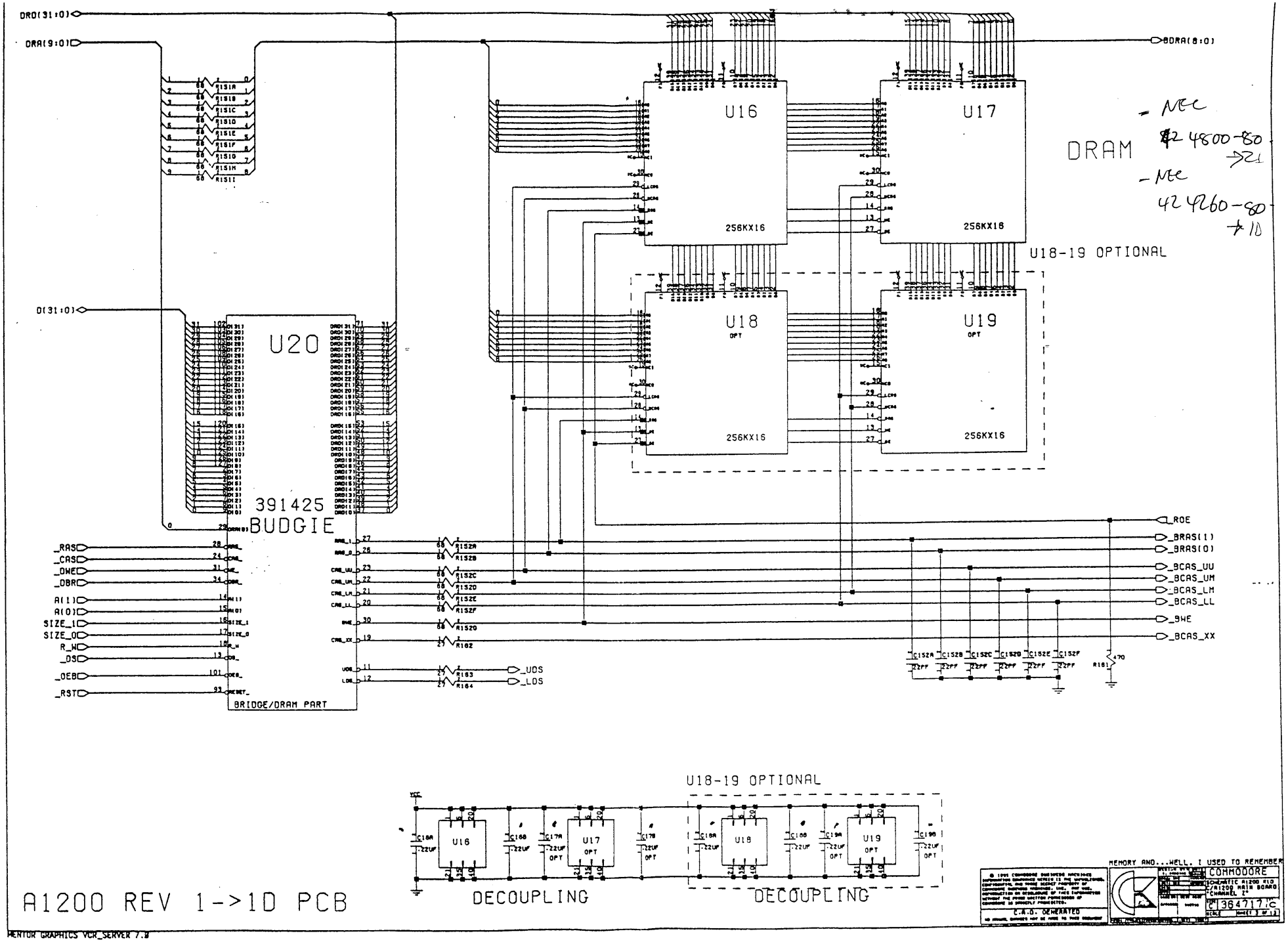
DRD(31:0)
DRA(9:0)
BDRA(8:0)
D(31:0)
U16
U17
U18
U19
256KX16
OPT
DRAM
- NEC
42 4800-80
→21
- NEC
42 4260-80
→1D
U18-19 OPTIONAL
U20
391425
BUDGIE
BRIDGE/DRAM PART
_RAS
_CAS
_DWE
_DBR
A(1)
A(0)
SIZE_1
SIZE_0
R_W
_DS
_OEB
_RST
_UDS
_LDS
ROE
_BRAS(1)
_BRAS(0)
_BCAS_UU
_BCAS_UM
_BCAS_LM
_BCAS_LL
_BWE
_BCAS_XX
R152A
R152B
R152C
R152D
R152E
R152F
R152G
R10Z
R163
R164
R161
470
C152A
C152B
C152C
C152D
C152E
C152F
22PF
U18-19 OPTIONAL
VCC
C18A
C18B
C17A
C17B
C19A
C19B
22UF
OPT
DECOUPLING
DECOUPLING
A1200 REV 1->1D PCB
MEMORY AND...HELL, I USED TO REMEMBER
COMMODORE
SCHEMATIC A1200 R1D
C/A1200 MAIN BOARD
CHANNEL 2
C 364717.C
C.A.D. GENERATED
MENTOR GRAPHICS VCR_SERVER 7.0

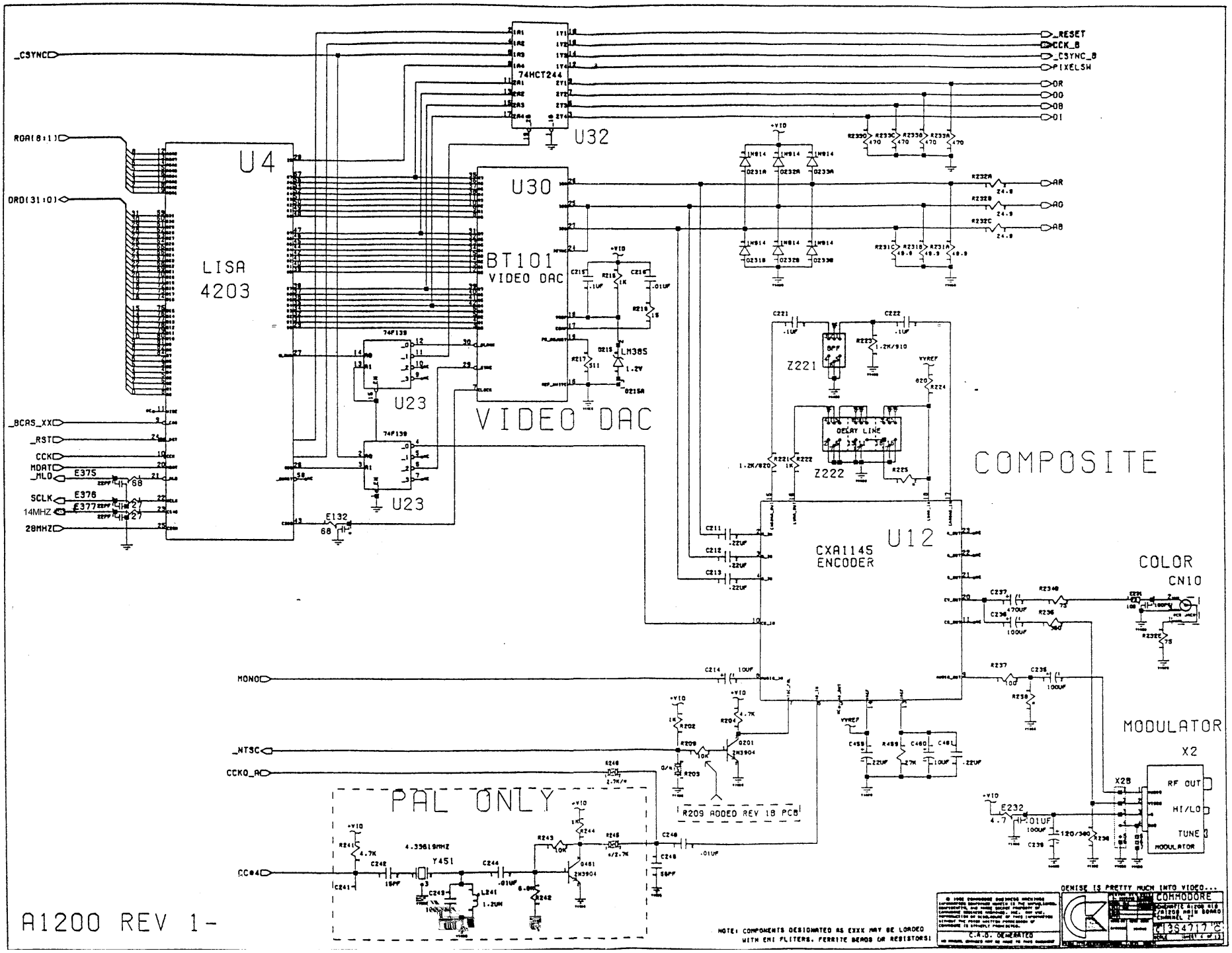
U4
LISA
4203
U32
74HCT244
U30
BT101
VIDEO DAC
VIDEO DAC
U23
U23
74F139
74F139
Z221
Z222
DELAY LINE
COMPOSITE
U12
CXA1145
ENCODER
COLOR
CN10
MODULATOR
X2
RF OUT
HI/LO
TUNE
MODULATOR
PAL ONLY
R209 ADDED REV 1B PCB
_CSYNC
ROA(8:1)
ORD(31:0)
_BCAS_XX
_RST
CCK
MDAT
_MLO
SCLK
14MHZ
28MHZ
MONO
_NTSC
CCKO_A
CC04
_RESET
CCK_B
_CSYNC_B
PIXELSW
OR
OG
OB
OI
AR
AG
AB
DENISE IS PRETTY MUCH INTO VIDEO...
NOTE: COMPONENTS DESIGNATED AS EXXX MAY BE LOADED WITH EMI FILTERS, FERRITE BEADS OR RESISTORS!
C.A.D. GENERATED
COMMODORE
A1200 REV 1-

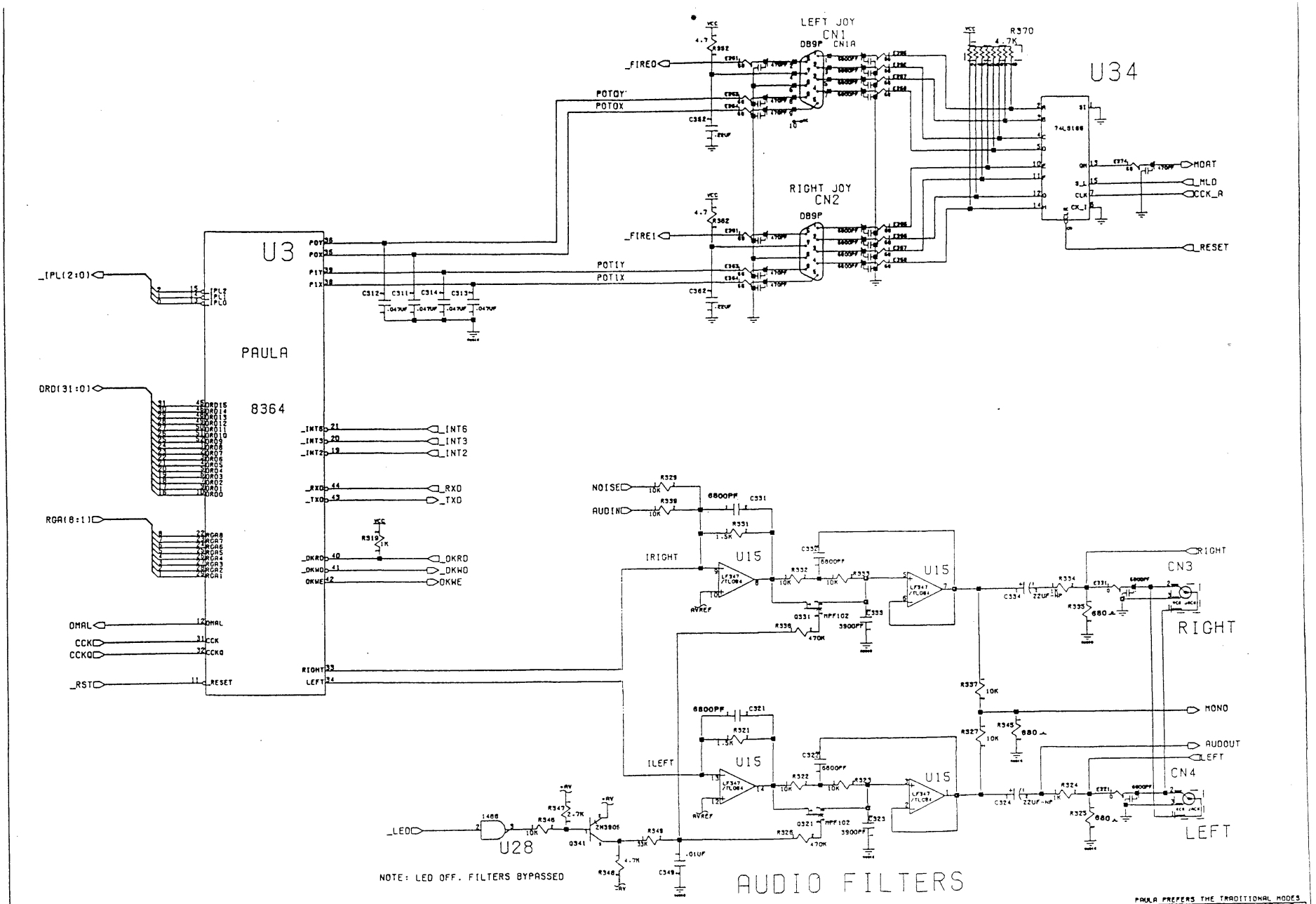

A1200 REV 1->1D PCB

MENTOR GRAPHICS VCR_SERVER 7.0

GENERAL DECOUPLING

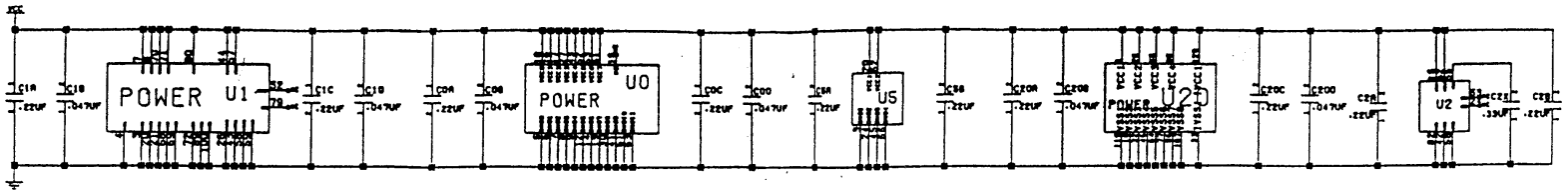

VIDEO DECOUPLING

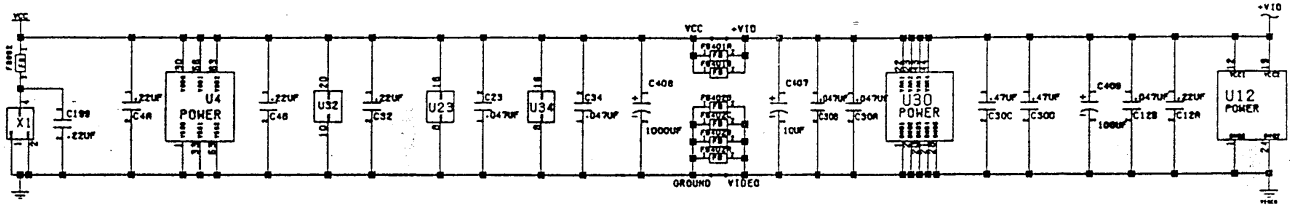

NOTE: AS OF REV 1C, LOGIC AND VIDEO GOUND AND POWER ARE THE SAME NET, BUT REROUTED DISCRETELY EXCEPT AT DAC1

ALSO ADDED C30C AND C30D FOR OVERKILL DAC DECOUPLING.

AUDIO DECOUPLING

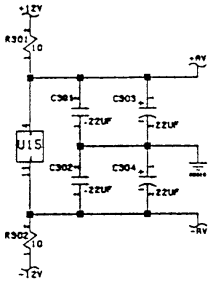

VIDEO OUT

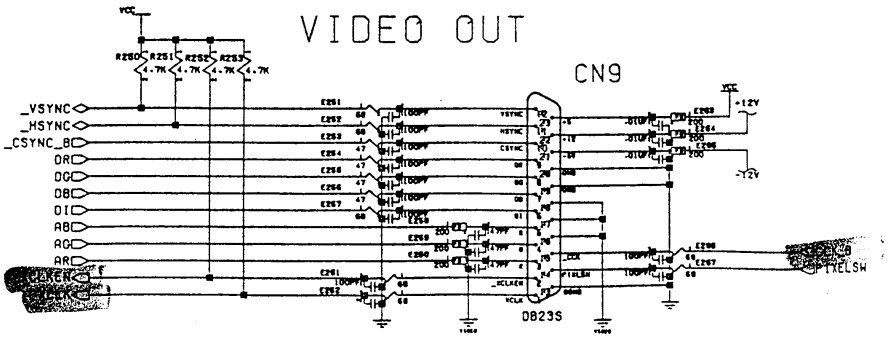

AUDIO POWER

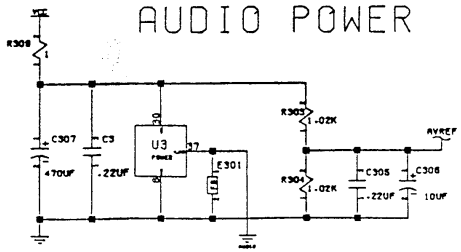

NOTE: GROUND INTERCONNECTION NEAR AUDIO JACKS.

A1200 REV 1->1D PCB

PARTY OUT OF BOUNDS. WHAT A MESS...

© 1991 COMMODORE BUSINESS MACHINES CORPORATION. COMMODORE BUSINESS MACHINES IS THE OWNER OF COPYRIGHTS, TRADE MARKS, PATENTS AND OTHER PROPRIETARY RIGHTS RELATING TO THIS SCHEMATIC. ANY USE, REPRODUCTION OR DISCLOSURE OF THIS INFORMATION WITHOUT THE PRIOR WRITTEN PERMISSION OF COMMODORE IS STRICTLY PROHIBITED.
C.A.D. GENERATED
NO MANUAL CHANGES MAY BE MADE TO THIS DOCUMENT

COMMODORE
SCHEMATIC A1200 R1D
C/A1200 MAIN BOARD
CHANNEL 1
364717 C
SHEET 8 OF 12

MENTOR GRAPHICS VCR_SERVER 7.8

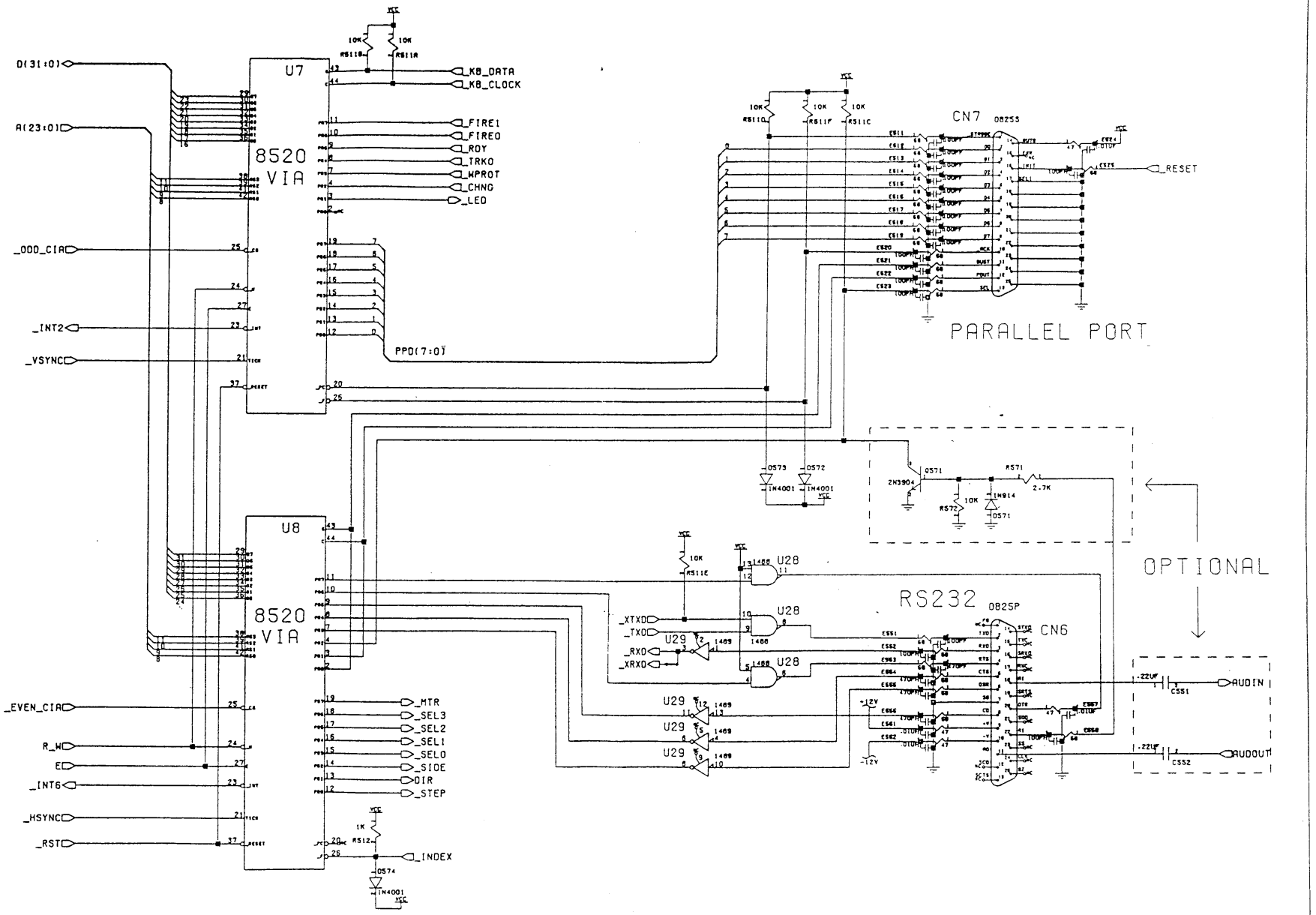

A1200 REV 1->1D PCB

MENTOR GRAPHICS VCR_SERVER 7.8

FLOPPY LOGIC

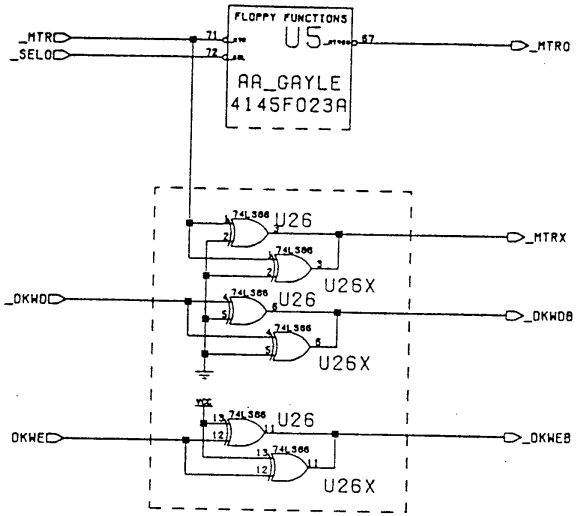

INTERNAL FLOPPY

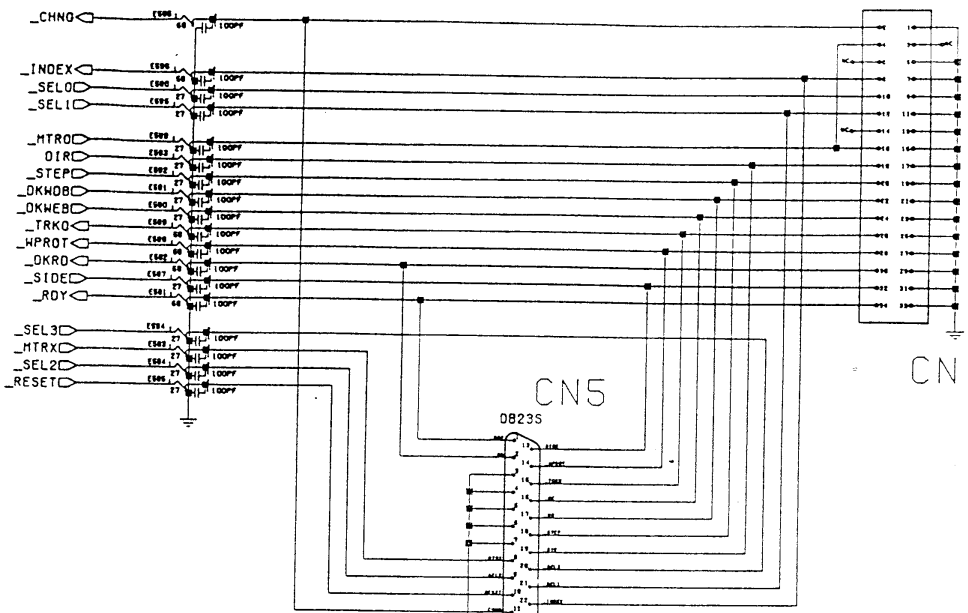

EXTERNAL FLOPPY

FLOPPY POWER

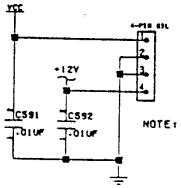

CN12

NOTE: SOME DRIVES ARE +5 ONLY...

DECOUPLING

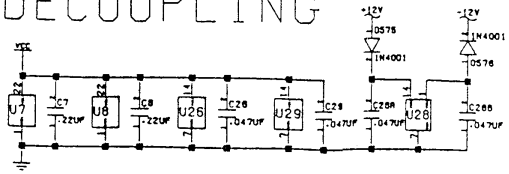

A1200 REV 1->1D PCB

THE REST OF THE FLOPPY STUFF

© 1991 COMMODORE BUSINESS MACHINES
INFORMATION CONTAINED HEREIN IS THE UNPUBLISHED,
CONFIDENTIAL AND TRADE SECRET PROPERTY OF
COMMODORE BUSINESS MACHINES, INC. AND MAY
NOT BE REPRODUCED OR DISCLOSED OR THIS INFORMATION
WITHOUT THE PRIOR WRITTEN PERMISSION OF
COMMODORE IS STRICTLY PROHIBITED.

C.A.D. GENERATED

NO MANUAL CHANGES MAY BE MADE TO THIS DRAWING

COMMODORE

SCHEMATIC A1200 R1D
S/A1200 MAIN BOARD
"CHANNEL Z"

C 364717 C

SCALE SHEET 8 OF 13

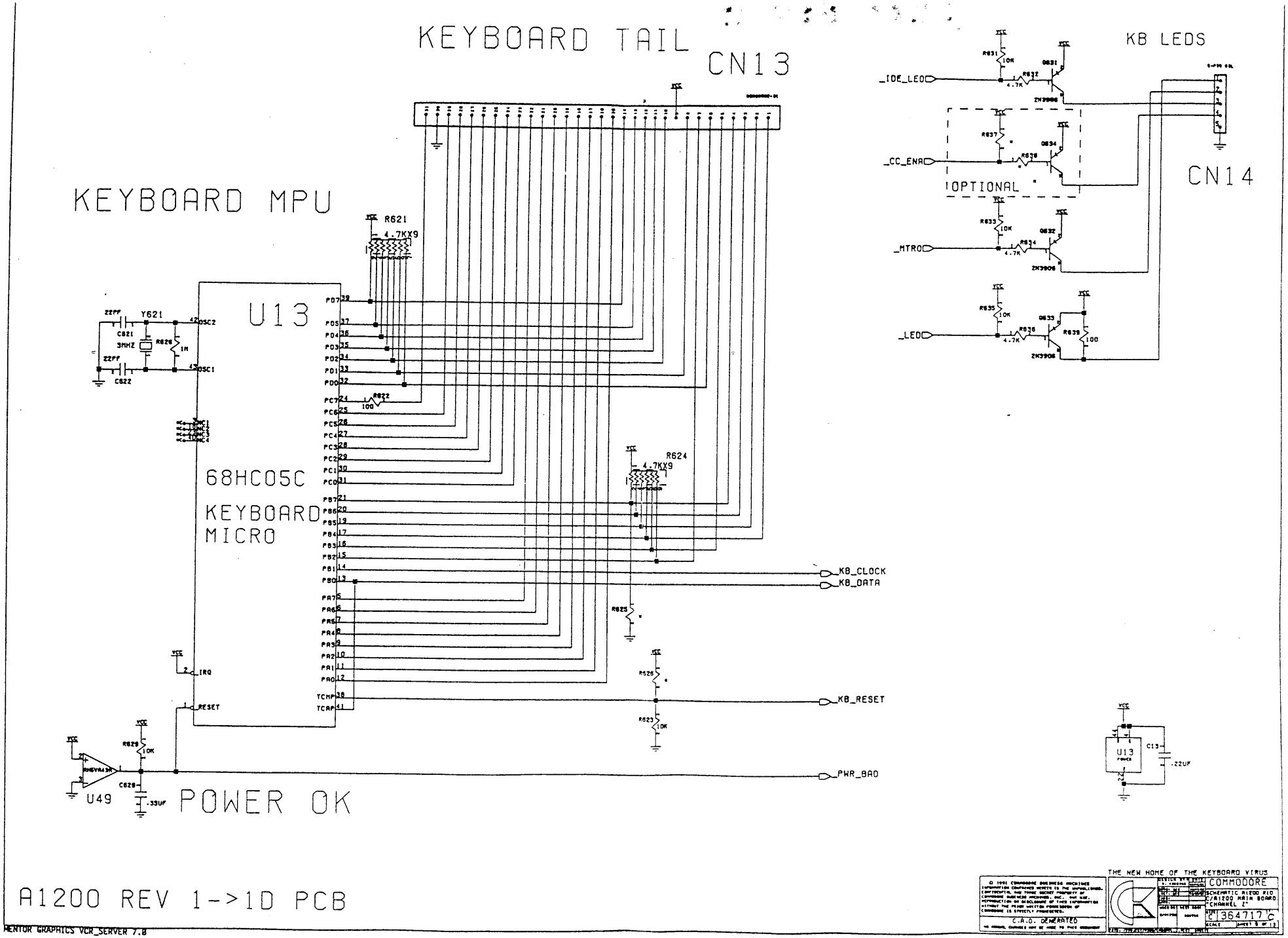

A1200 REV 1->1D PCB

MENTOR GRAPHICS VCR_SERVER 7.0

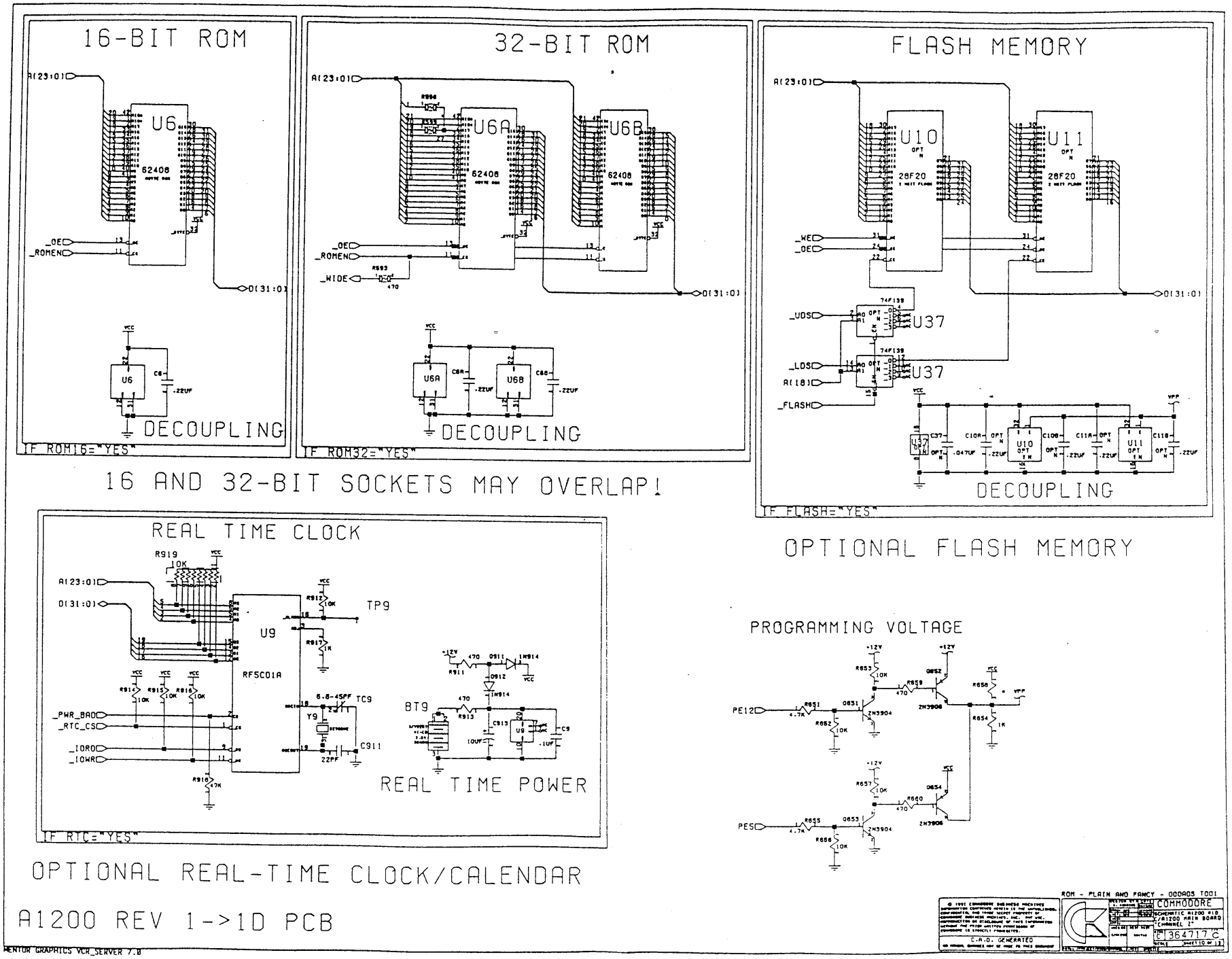
16-BIT ROM
A(23:0)
U6
62408
_OE
_ROMEN
D(31:0)
VCC
C6
.22UF
DECOUPLING
IF ROM16="YES"
32-BIT ROM
A(23:0)
R994
U6A
U6B
62408
_OE
_ROMEN
_WIDE
R993
470
D(31:0)
C8A
C8B
.22UF
DECOUPLING
IF ROM32="YES"
16 AND 32-BIT SOCKETS MAY OVERLAP!
FLASH MEMORY
A(23:0)
U10
U11
28F20
_WE
_OE
D(31:0)
_UDS
_LDS
A(18)
_FLASH
74F139
U37
C37
.047UF
C10A
C10B
C11A
C11B
.22UF
VPP
DECOUPLING
IF FLASH="YES"
OPTIONAL FLASH MEMORY
REAL TIME CLOCK
R919
10K
A(23:0)
D(31:0)
U9
RF5C01A
R912
10K
TP9
R917
1K
R914
R915
R916
_PWR_BAD
_RTC_CS
_IORD
_IOWR
R918
47K
6.8-45PF
TC9
Y9
C911
22PF
BT9
R911
470
D911
1N914
D912
R913
C913
10UF
C9
.1UF
REAL TIME POWER
IF RTC="YES"
OPTIONAL REAL-TIME CLOCK/CALENDAR
PROGRAMMING VOLTAGE
+12V
R652
10K
Q652
R659
470
ZN3906
R658
VPP
PE12
R651
4.7K
Q651
ZN3904
R654
1K
R653
10K
R657
R660
Q654
PE5
R655
Q653
R656
A1200 REV 1->1D PCB
ROM - PLAIN AND FANCY - 000905 T001
COMMODORE
SCHEMATIC A1200 A1B
C/A1200 MAIN BOARD
"CHANNEL 2"
364717 C
C-A-D GENERATED
MENTOR GRAPHICS VCR_SERVER 7.8

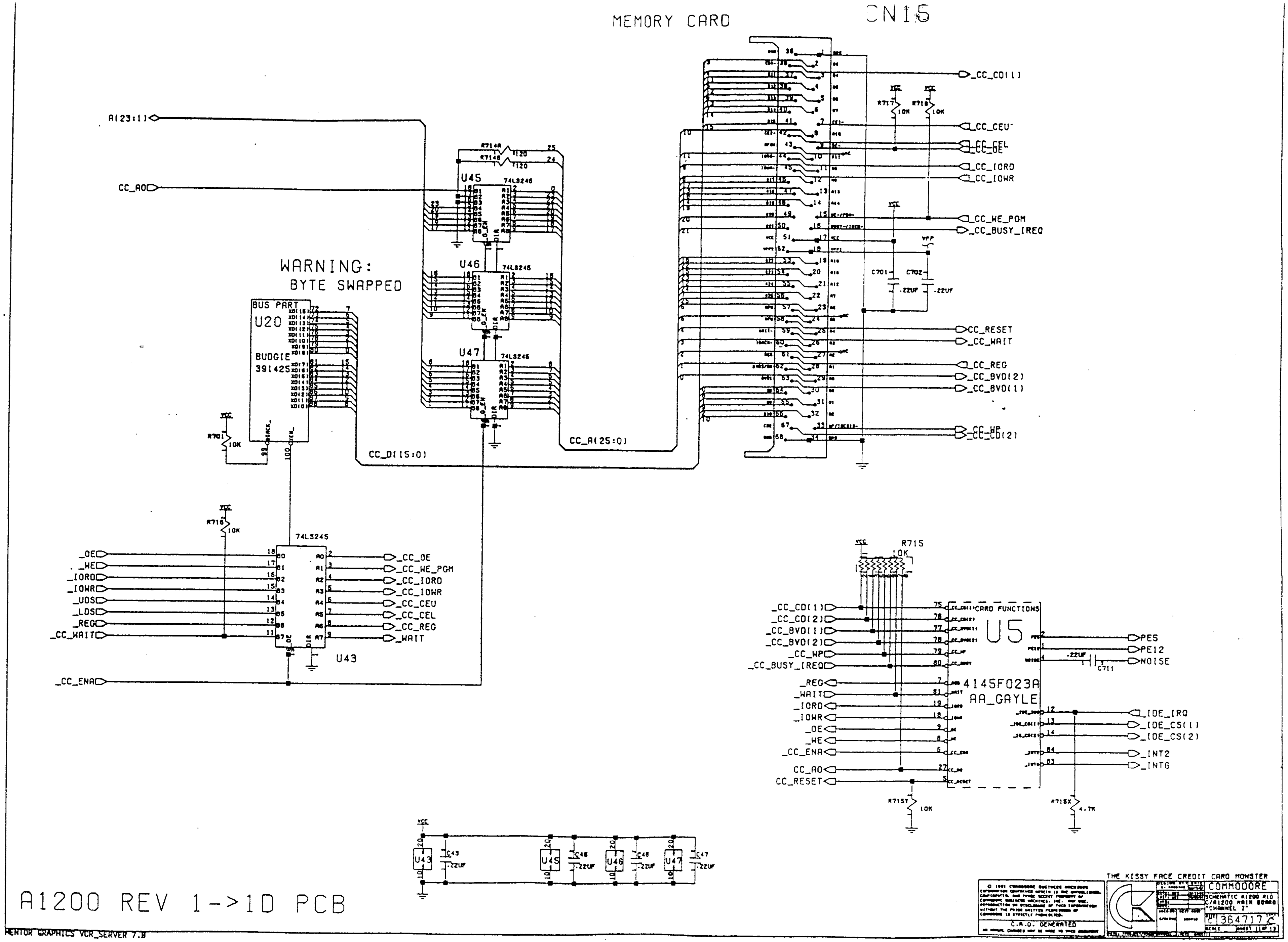

MEMORY CARD
CN15
A(23:1)
CC_A0
WARNING:
BYTE SWAPPED
BUS PART
U20
BUDGIE
391425
U45
U46
U47
74LS245
CC_D(15:0)
CC_A(25:0)
_CC_CD(1)
_CC_CEU
_CC_CEL
_CC_OE
_CC_IORD
_CC_IOWR
_CC_WE_PGM
_CC_BUSY_IREQ
CC_RESET
_CC_WAIT
_CC_REG
_CC_BVD(2)
_CC_BVD(1)
_CC_WP
_CC_CD(2)
_OE
_WE
_IORD
_IOWR
_UDS
_LDS
_REG
_CC_WAIT
_CC_ENA
U43
_CC_OE
_CC_WE_PGM
_CC_IORD
_CC_IOWR
_CC_CEU
_CC_CEL
_CC_REG
_WAIT
CARD FUNCTIONS
U5
4145F023A
AA_GAYLE
_CC_CD(1)
_CC_CD(2)
_CC_BVD(1)
_CC_BVD(2)
_CC_WP
_CC_BUSY_IREQ
_REG
_WAIT
_IORD
_IOWR
_OE
_WE
_CC_ENA
CC_A0
CC_RESET
PE5
PE12
NOISE
_IDE_IRQ
_IDE_CS(1)
_IDE_CS(2)
_INT2
_INT6
R715
10K
R715Y
R715X
4.7K
C711
.22UF
C701
C702
VPP
VCC
R717
R718
R716
R701
R714A
R714B
C43
C45
C46
C47
A1200 REV 1->1D PCB
THE KISSY FACE CREDIT CARD MONSTER
COMMODORE
SCHEMATIC A1200 A1D
C/A1200 MAIN BOARD
"CHANNEL Z"
364717
C.A.D. GENERATED
MENTOR GRAPHICS VCR_SERVER 7.0

MEMORY EXPANSION

IDE DRIVE

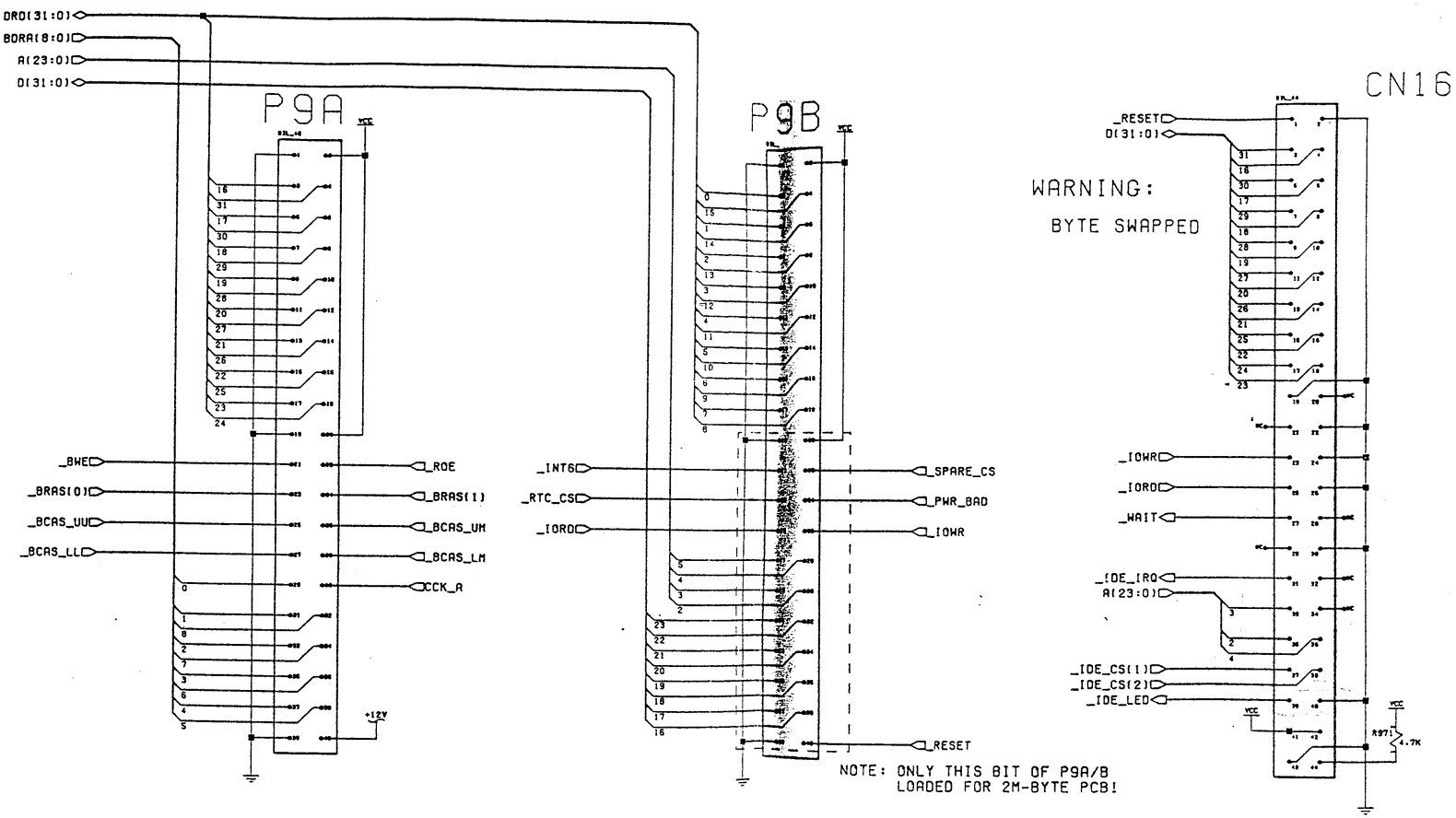

A1200 REV 1->1D PCB

MENTOR GRAPHICS VCR_SERVER 7.8

MEMORY EXPANSION AND THE IDE DRIVE

COMMODORE

SCHEMATIC A1200 R10
A/A1200 MAIN BOARD
"CHANNEL Z"

C.A.D. GENERATED

SIZE C 364717 C

SCALE

SHEET 12 OF 12

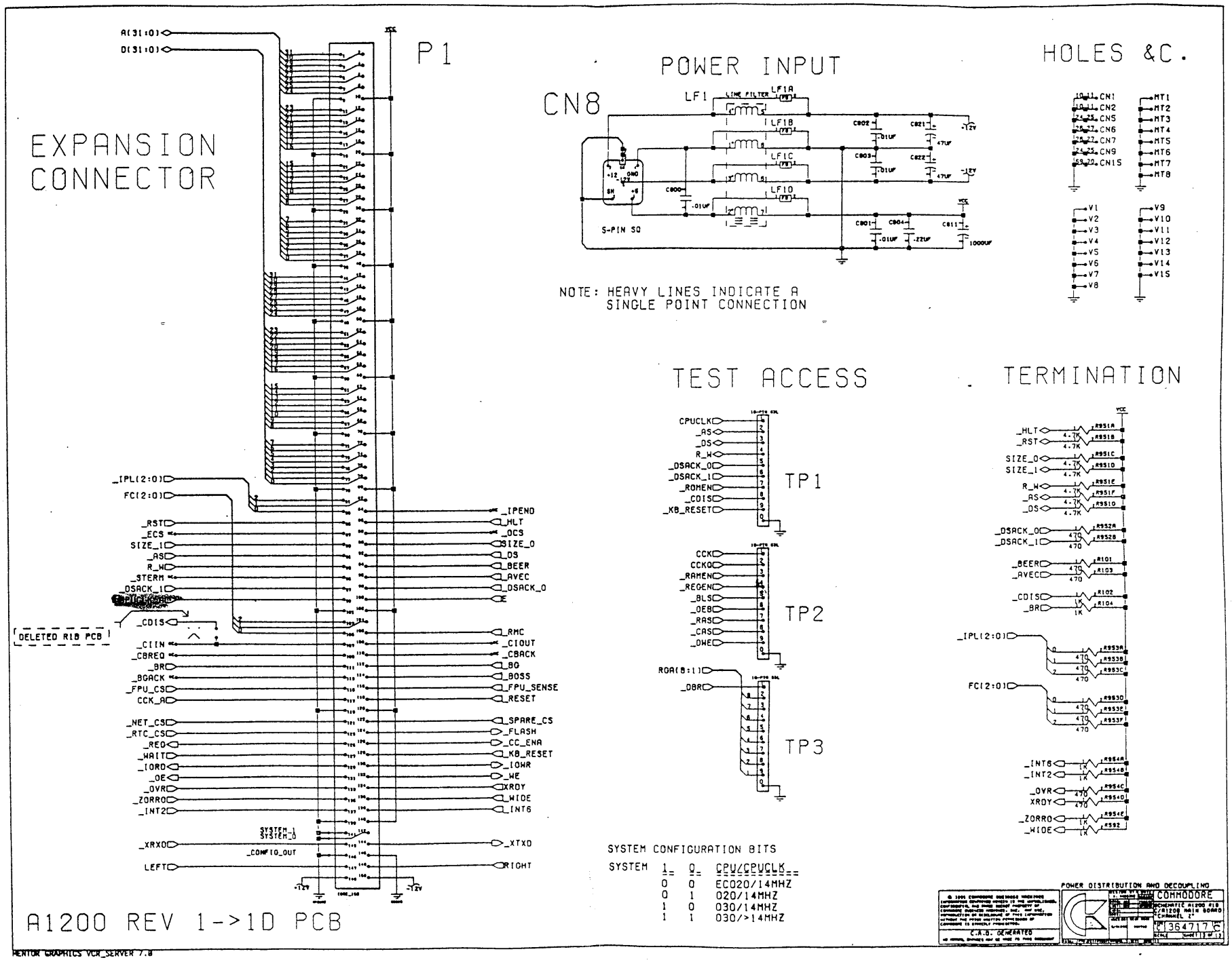
EXPANSION CONNECTOR
P1
A(31:0)
D(31:0)
_IPL(2:0)
FC(2:0)
_RST
_ECS
SIZE_1
_AS
R_W
_STERM
_DSACK_1
_CDIS
DELETED R18 PCB
_CIIN
_CBREQ
_BR
_BGACK
_FPU_CS
CCK_A
_NET_CS
_RTC_CS
_REQ
_WAIT
_IORD
_OE
_OVR
_ZORRO
_INT2
_XRXD
LEFT
_IPEND
_HLT
_OCS
SIZE_0
_DS
_BEER
_AVEC
_DSACK_0
OE
_RMC
_CIOUT
_CBACK
_BG
_BOSS
_FPU_SENSE
_RESET
_SPARE_CS
_FLASH
_CC_ENA
_KB_RESET
_IOWR
_WE
XRDY
_WIDE
_INT6
_XTXD
RIGHT
SYSTEM_1
SYSTEM_0
_CONFIG_OUT
A1200 REV 1->1D PCB
POWER INPUT
CN8
LF1
LINE FILTER
LF1A
LF1B
LF1C
LF1D
C800
C802
C821
C803
C822
C801
C804
C811
.01UF
47UF
.22UF
1000UF
+12V
-12V
VCC
S-PIN SQ
NOTE: HEAVY LINES INDICATE A SINGLE POINT CONNECTION
HOLES &C.
CN1
CN2
CN5
CN6
CN7
CN9
CN15
MT1
MT2
MT3
MT4
MT5
MT6
MT7
MT8
V1
V2
V3
V4
V5
V6
V7
V8
V9
V10
V11
V12
V13
V14
V15
TEST ACCESS
TP1
CPUCLK
_AS
_DS
R_W
_DSACK_0
_DSACK_1
_ROMEN
_CDIS
_KB_RESET
TP2
CCK
CCKO
_RAMEN
_REGEN
_BLS
_OEB
_RAS
_CAS
_DWE
TP3
RDA(8:1)
_DBR
TERMINATION
_HLT
_RST
SIZE_0
SIZE_1
R_W
_AS
_DS
_DSACK_0
_DSACK_1
_BEER
_AVEC
_CDIS
_BR
_IPL(2:0)
FC(2:0)
_INT6
_INT2
_OVR
XRDY
_ZORRO
_WIDE
4.7K
470
1K
SYSTEM CONFIGURATION BITS
SYSTEM 1 0 CPU/CPUCLK
0 0 EC020/14MHZ
0 1 020/14MHZ
1 0 030/14MHZ
1 1 030/>14MHZ
POWER DISTRIBUTION AND DECOUPLING
COMMODORE
SCHEMATIC A1200 R1D
C/A1200 MAIN BOARD
CHANNEL 2
364717.C
C.A.D. GENERATED
MENTOR GRAPHICS VCR_SERVER 7.8