REVISIONS				
LTR	ZONE	DESCRIPTION	DATE	APPROVED
1		Advance Engineering Release	6-5-92	JCB
A		Pilot Production Release	8-13-92	JCB

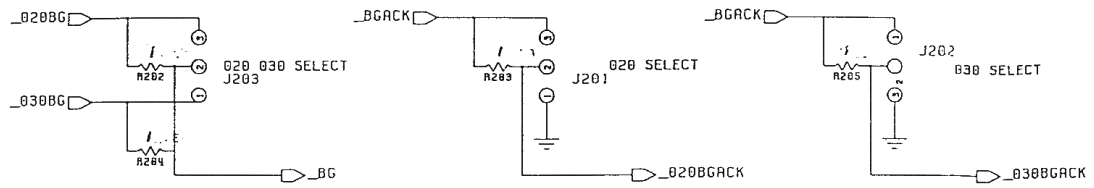

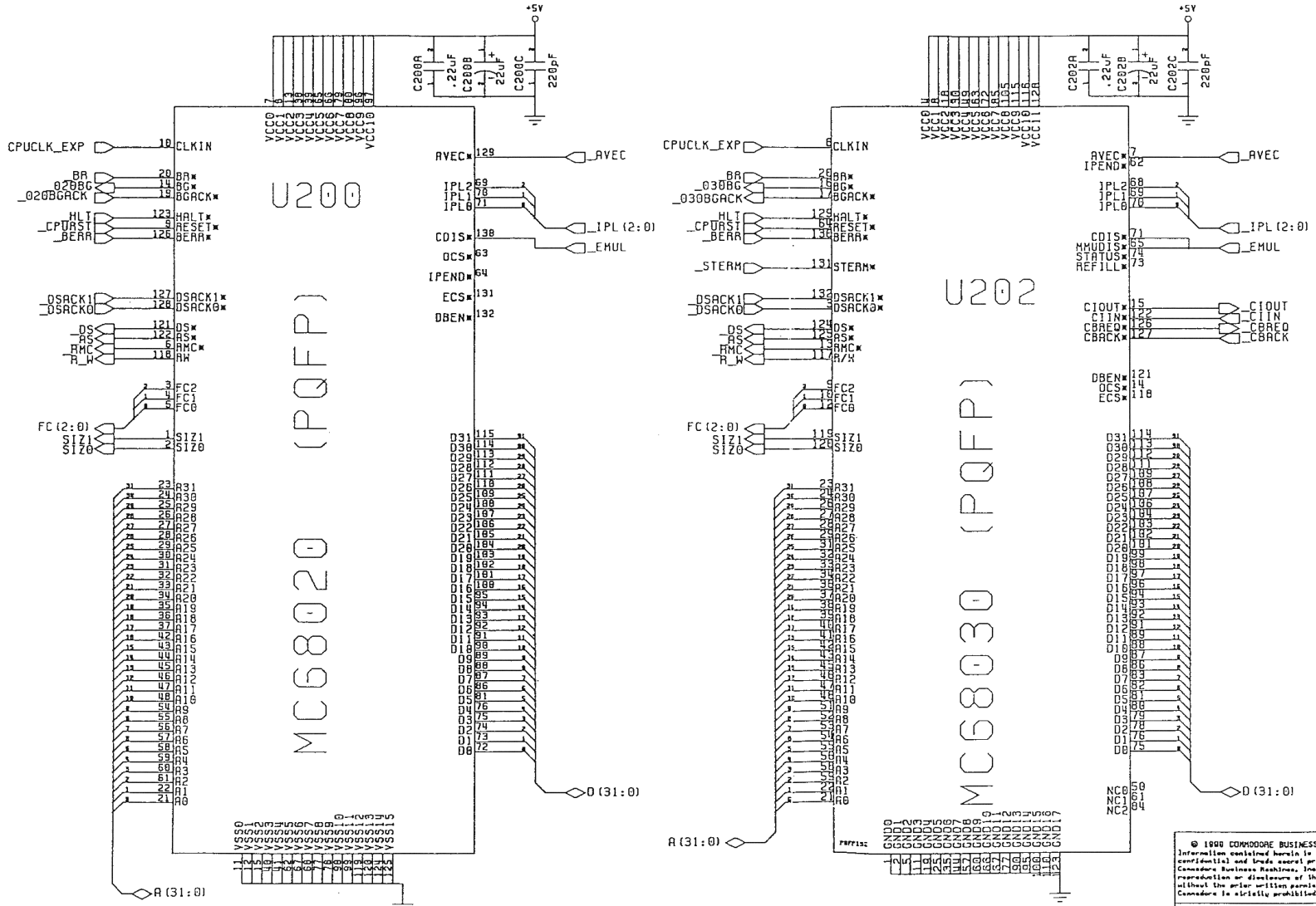

© 1990 COMMODORE BUSINESS MACHINES
Information contained herein is the unpublished, confidential and trade secret property of Commodore Business Machines, Inc. Any use, reproduction or disclosure of this information without the prior written permission of Commodore is strictly prohibited.

C.A.D. Generated
No manual changes may be made to this document

CPU Card

REV

DRAWN BY: 5/82
CHKD:
ENGR. J. SCHERFER
APPR:
USED ON | NEXT ASST

Commodore
68020/68030

SIZE 364835 A
SCALE SHEET 1 OF 2

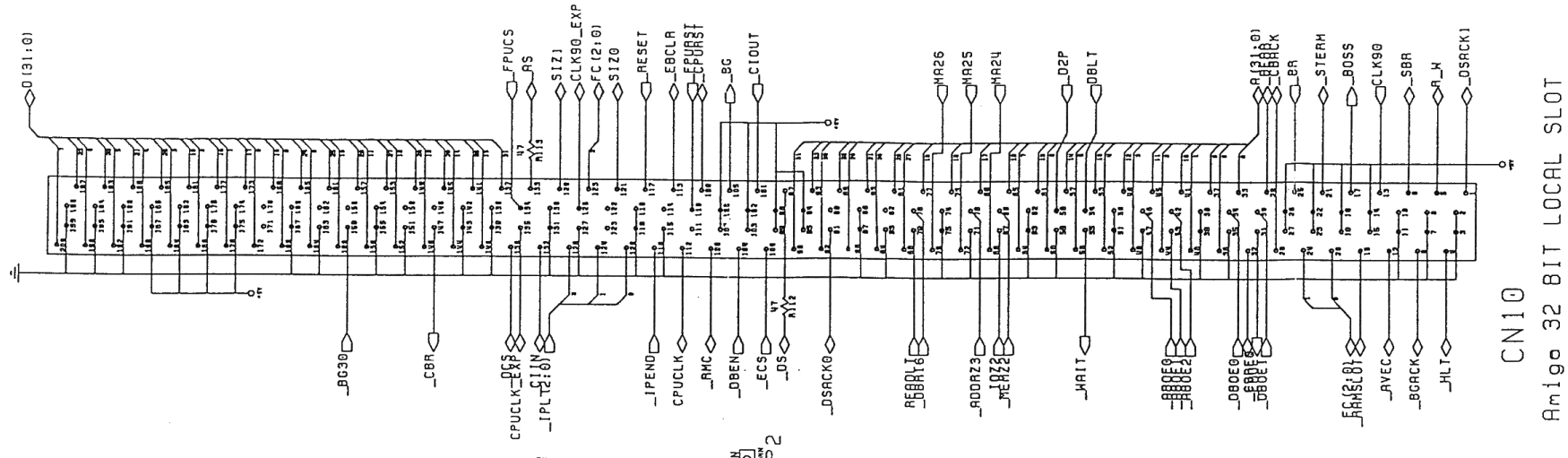

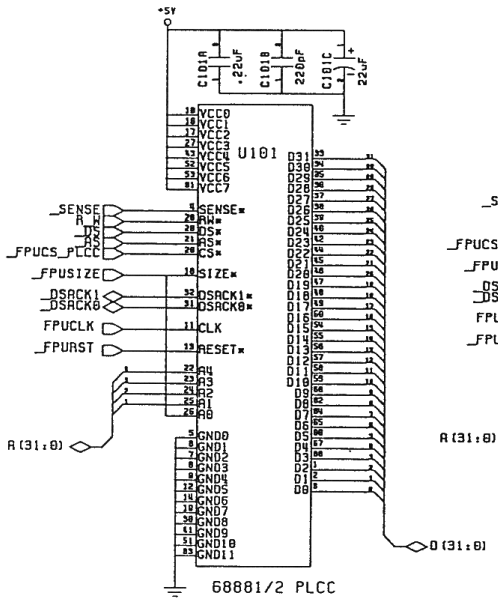

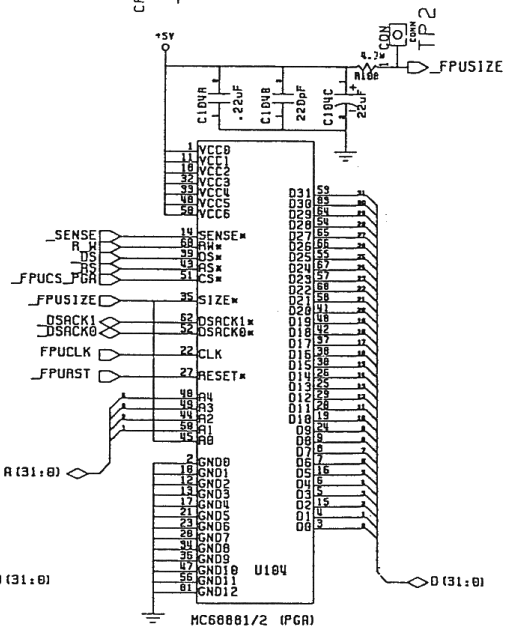

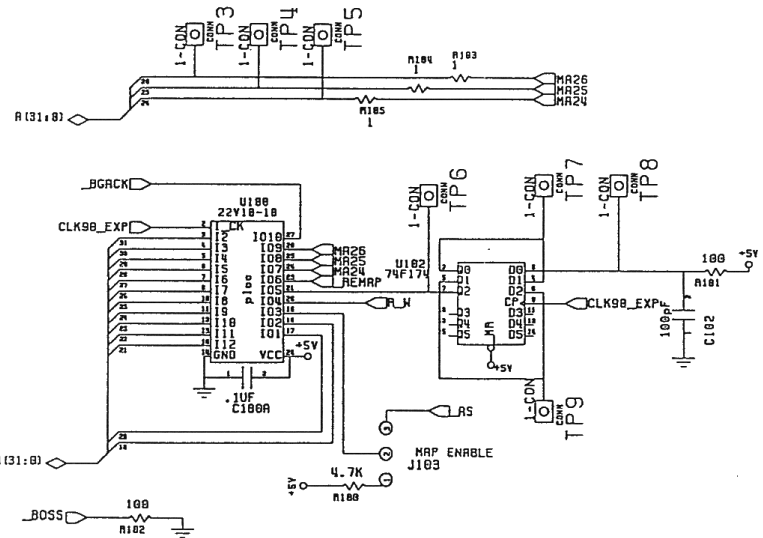

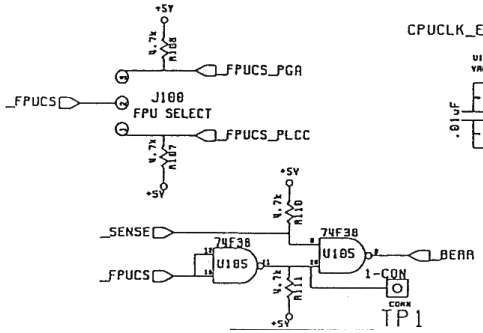

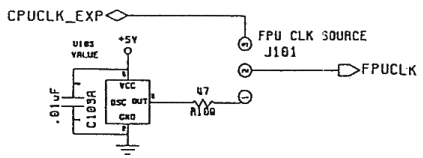

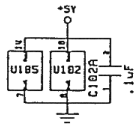

© 1990 COMMODORE BUSINESS MACHINES
Information contained herein is the unpublished, confidential and trade secret property of Commodore Business Machines, Inc. Any use, reproduction or disclosure of this information without the prior written permission of Commodore is strictly prohibited.

C.A.D. Generated
No manual changes may be made to this document

Commodore
68020/68030
CPU Card
364835
REV 1
SCALE
SHEET 2 OF 2